NPS ARCHIVE
1998.09
STRICKLAND, W.

DUDLEY KNOX LIBRARY
NAVAL POSTGRADUATE SCHOOL
MONTEREY CA 93943-5101

# NAVAL POSTGRADUATE SCHOOL
## Monterey, California

# THESIS

**A WIDEBAND MULTICARRIER CDMA CELLULAR COMMUNICATIONS SYSTEM**

by

Wilburn T. Strickland, Jr.

September 1998

| | |
|---|---|
| Thesis Advisor: | Tri Ha |
| Co-Advisor: | R. Clark Robertson |

**Approved for public release, distribution unlimited.**

# REPORT DOCUMENTATION PAGE

Form Approved OMB No. 0704-0188

Public reporting burden for this collection of information is estimated to average 1 hour per response, including the time for reviewing instruction, searching existing data sources, gathering and maintaining the data needed, and completing and reviewing the collection of information. Send comments regarding this burden estimate or any other aspect of this collection of information, including suggestions for reducing this burden, to Washington Headquarters Services, Directorate for Information Operations and Reports, 1215 Jefferson Davis Highway, Suite 1204, Arlington, VA 22202-4302, and to the Office of Management and Budget, Paperwork Reduction Project (0704-0188) Washington DC 20503.

| | | |
|---|---|---|
| 1. AGENCY USE ONLY *(Leave blank)* | 2. REPORT DATE<br>September 1998 | 3. REPORT TYPE AND DATES COVERED<br>Master's Thesis |

| | |
|---|---|
| 4. TITLE AND SUBTITLE A WIDEBAND MULTICARRIER CDMA CELLULAR COMMUNICATIONS SYSTEM | 5. FUNDING NUMBERS |
| 6. AUTHOR(S) Wilburn T. Strickland, Jr. | |
| 7. PERFORMING ORGANIZATION NAME(S) AND ADDRESS(ES)<br>Naval Postgraduate School<br>Monterey, CA 93943-5000 | 8. PERFORMING ORGANIZATION REPORT NUMBER |
| 9. SPONSORING/MONITORING AGENCY NAME(S) AND ADDRESS(ES) | 10. SPONSORING/MONITORING AGENCY REPORT NUMBER |

11. SUPPLEMENTARY NOTES The views expressed in this thesis are those of the author and do not reflect the official policy or position of the Department of Defense or the U.S. Government.

| | |
|---|---|
| 12a. DISTRIBUTION/AVAILABILITY STATEMENT<br>Approved for public release, distribution unlimited. | 12b. DISTRIBUTION CODE |

13. ABSTRACT *(maximum 200 words)*

The demand for mobile access to high data rate communications services such as video teleconferencing, internet access, or file transfer continues to grow rapidly for a wide variety of military as well as commercial applications. Existing mobile narrowband cellular communications systems do not have sufficient bandwidth to support high data rate applications. Simply increasing the bandwidth of existing cellular systems to support higher data rates results in a significant degradation in signal quality and reliability due to frequency- selective fading. The wideband cellular system design presented in this thesis features a multicarrier approach that minimizes frequency-selective fading effects for very high data rate applications and a dual mode reverse channel that facilitates efficient utilization of bandwidth for low to very high data rate applications.

| | |
|---|---|
| 14. SUBJECT TERMS Cellular, CDMA, Wideband, Multicarrier | 15. NUMBER OF PAGES 108 |
| | 16. PRICE CODE |

| | | | |
|---|---|---|---|
| 17. SECURITY CLASSIFICATION OF REPORT<br>Unclassified | 18. SECURITY CLASSIFICATION OF THIS PAGE<br>Unclassified | 19. SECURITY CLASSIFICATION OF ABSTRACT<br>Unclassified | 20. LIMITATION OF ABSTRACT<br>UL |

NSN 7540-01-280-5500

Standard Form 298 (Rev. 2-89)
Prescribed by ANSI Std. 239-18 298-102

**Approved for public release, distribution unlimited.**

# A WIDEBAND MULTICARRIER CDMA CELLULAR COMMUNICATIONS SYSTEM

Wilburn T. Strickland, Jr.
Lieutenant Commander, United States Navy
B.E.E., Georgia Institute of Technology, 1984

Submitted in partial fulfillment
of the requirements for the degree of

**MASTER OF SCIENCE**
**IN**
**ELECTRICAL ENGINEERING**

from the

**NAVAL POSTGRADUATE SCHOOL**
September 1998

DUDLEY KNOX LIBRARY
NAVAL POSTGRADUATE SCHOOL
MONTEREY CA 93943-5101

## ABSTRACT

The demand for mobile access to high data rate communications services such as video teleconferencing, internet access, or file transfer continues to grow rapidly for a wide variety of military as well as commercial applications. Existing mobile narrowband cellular communications systems do not have sufficient bandwidth to support high data rate applications. Simply increasing the bandwidth of existing cellular systems to support higher data rates results in a significant degradation in signal quality and reliability due to frequency- selective fading. The wideband cellular system design presented in this thesis features a multicarrier approach that minimizes frequency-selective fading effects for very high data rate applications and a dual mode reverse channel that facilitates efficient utilization of bandwidth for low to very high data rate applications.

## TABLE OF CONTENTS


I. INTRODUCTION.....1

A. BACKGROUND.....1
1. Why Digital.....3
2. Why Wideband.....4
3. History of Cellular.....5
4. Why Cellular.....1
5. Basic Cellular System Architecture.....6
6. How A Call Is Made.....7
7. Frequency Reuse and Co-Channel Interference.....7
8. Fading.....9
a. Multipath Fading.....9
b. Doppler Spreading.....10

B. OBJECTIVE.....11

C. APPROACH.....11

II. OVERVIEW OF EXISTING CELLULAR SYSTEMS.....13

A. GSM.....13
1. System Description.....13
2. Traffic and Control Channels.....14
3. Multiplexing.....15
4. Speech Coding.....15
5. Forward Error Correction Coding.....16
6. Interleaving.....16
7. Encryption.....16
8. Modulation.....17

B. USDC.....17
1. System Description.....17
2. Control Channels.....18
3. Multiplexing.....18
4. Speech Coding.....18
5. Forward Error Correction Coding.....18
6. Interleaving and Modulation.....19

C. IS-95.....19
1. SystemDescription.....19
2. Forward Channel.....21
3. Reverse Channel.....22

D. PCS....22
1. Second Generation Systems with Added Features....22
2. Third Generation Systems....23
a. Japan....24
b. Europe....24
c. North America....25

III. FORWARD CHANNEL CONCEPTUAL DESIGN....27

A. DATA CHANNEL....27
1. Overview
2. Subcarrier Demultiplexing....30
3. Channel Demultiplexing....31
4. Forward Error Correction Coding....32
5. Symbol Repetition....32
6. Interleaving....35
7. Data Scrambling....38
8. Control and Signaling Multiplexing....39
9. Orthogonal Spreading....39
10. Short PN Code....42
11. Modulation....43
12. Power Combining....46

B. PILOT CHANNEL....46

C. SYNCHRONIZATION CHANNEL....46

D. PAGING CHANNEL....47

IV. REVERSE CHANNEL CONCEPTUAL DESIGN....49

A. OVERVIEW....49

B. MODE I....50
1. Data Channel....52
a. Subcarrier Demultiplexing....52
b. Channel Demultiplexing....53
c. Forward Error Correction Coding....53
d. Symbol Repetition....53
e. Interleaving....53
f. Data Scrambling....56
g. Control and Signal Multiplexing....59
h. Orthogonal Spreading....59
i. Short PN Code....60
j. Modulation....61
k. Power Combining....64

2. Pilot Channel....64
3. Synchronization Channel....64
4. Access Channel....65

C. MODE II....66
1. Overview....66
2. Data Channel....67
a. Subcarrier Demultiplexing....67
b. Channel Demultiplexing....69
c. Forward Error Correction Coding....69
d. Symbol Repetition....69
e. Interleaving....69
f. Long PN Code....69
g. Control and Signal Multiplexing....72
h. Short PN Code....72
i. Modulation....72
j. Power Combining....74
3. Synchronization Channel....74
4. Access Channel....74

V. FRAMING CONCEPTUAL DESIGN....77

A. OVERVIEW....77

B. FORWARD CHANNEL....77
1. Traffic Channel....77
2. Paging Channel....79
3. Sync Channel....79

C. REVERSE CHANNEL....79
1. Traffic Channel....79
2. Access Channel....79
3. Sync Channel....82

D. DEMAND ASSIGNMENT....82

E. POWER CONTROL....85

F. GLOBAL POSITIONING....85

VI. CONCLUSIONS AND RECOMMENDATIONS....87

A. CONCLUSIONS....87

B. RECOMMENDATIONS....89

LIST OF REFERENCES.....91

INITIAL DISTRIBUTION LIST.....93

## LIST OF FIGURES


3.1 Forward Traffic Channel....28
3.2 Forward Pilot, Paging, and Synchronization Channels....33
3.3 Rate ½, Constraint Length 9 Convolutional Encoder....34
3.4 Block Interleaver Input....36
3.5 Block Interleaver Output....37
3.6 Walsh-Hadamard Functions....42
3.7 Binary and Quadrature Phase Shift Keying Modulation....44
3.8 Offset Quadrature Phase Shift Keying Modulation....45

4.1 Reverse Traffic Channel Mode I....51
4.2 Reverse Pilot, Paging, and Synchronization Channels (Mode I)....54
4.3 Rate ½, Constraint Length 9 Convolutional Encoder....55
4.4 Block Interleaver Input....57
4.5 Block Interleaver Output....58
4.6 Walsh-Hadamard Functions....60
4.7 Binary and Quadrature Phase Shift Keying Modulation....62
4.8 Offset Quadrature Phase Shift Keying Modulation....63
4.9 Reverse Traffic Channel Mode II....68
4.10 Reverse Pilot, Access, and Synchronization Channels (Mode II)....70
4.11 Differential Phase Shift Keying Modulation....73

5.1 Bit Structure for Traffic Channel Frames....78
5.2 Paging/Access Channel Frame Structure....80
5.3 Synchronization Channel Frame Structure....81
5.4 Demand Assignment Message Formats....84

## LIST OF TABLES

2.1 Comparison of GSM and USDC Specifications.....19
2.2 FCC Broadband PCS Spectrum Allocation.....23

3.1 RMS Delay Spread and Channel Coherence Bandwidth at Selected Locations...30

# I. INTRODUCTION

## A. BACKGROUND

### 1. Why Cellular

The primary motivation for wireless communications is mobility. A cellular architecture is required to provide the capacity necessary to make wireless communications practical over a wide area for a large number of users. People want continuous access to reliable and robust communications whether they are at their office, at home, in a car, ship, or plane, or at a remote location anywhere on Earth. A recent study indicated that supporting a mobile work force is seen as an essential application of communications technology because it eliminates cabling, facilitates employee moves and system additions, and frees up employees to work at home or on the road. Less developed countries that do not have an existing conventionally wired telephone network can jump straight to the latest technology by installing a wireless cellular system and enjoy a huge cost savings in infrastructure. They can receive the advantages of the latest technology without installing thousands of miles of phone line. China is installing a national public communications system consisting of a fiber backbone and analog cellular air interface. Bangkok has four times as many cellular phones as conventional 'wired' ones. In severe climates, the absence of exposed cable enhances system reliability. And with wireless systems, theft of expensive copper cable is not an issue. [1]

The dynamic and flexible nature of military operations makes wireless technology attractive for a wide variety of applications. Wireless technology allows flexible access to local area networks or databases from almost anywhere on a ship. Marines, SEALS, Joint Task Forces, and afloat staffs who embark and disembark ships on a frequent basis can save considerable time connecting and disconnecting computers and can work with their laptops where it is most efficient vice at the nearest available physical connection. People who must move around the ship frequently such as the Commanding Officer can maintain continuous access to important information regardless of location. Ship's engineers repairing a lube oil service pump can consult technical manuals from an up-to-date database via a wireless link without leaving the engine room. Technical experts ashore can examine broken equipment anywhere on the ship via wideband wireless video and assist with troubleshooting and repairs while the ship is

underway. Technical assistance can occur immediately without waiting for a port call or flying personnel all over the world. Aircraft maintenance crews currently must download maintenance data from the aircraft to a laptop after landing and manually enter it into a database to determine what services the aircraft requires prior to its next flight. A wideband wireless system can transmit the data during the plane's approach, allowing maintenance crews to service the aircraft immediately upon landing and shorten turnaround time. Sensors with wireless links can provide almost limitless flexibility in reconfiguring surveillance and warning systems to meet changing situations. The Navy is even investigating wireless links for ship steering signals in the LPD-17.

The development of modern circuit integration and fabrication techniques makes it possible to build radios small, cheap, and reliable enough to be portable. Cellular technology was developed in response to increased demand for mobile phone capacity. Cellular users around the globe number over 180 million, including 54 million in the U.S. alone. In the U.S. 20% of the population owns a cellular phone. In Finland market penetration is 40%. The number of Japanese subscribers grew by 13 million in 1996. There are over 60 million subscribers using GSM, the first digital cellular system to be deployed and the one with the largest market share. GSM is currently being used by over 240 carriers in 160 countries. [2]

The huge demand for mobile phones requires a cellular architecture to achieve the capacity necessary to support a large number of mobile users in a given service area. Early mobile radio systems were similar to television and radio stations. A high power transmitter on a tower covered a large service area. The frequency spectrum allocated to the system was divided into a finite number of sub-bands, or channels. Only one customer could use a channel at a time. When the number of customers using the system at one time exceeded the total number of channels available, the system could support no more callers. Each channel must be at least wide enough to accommodate the bandwidth of the signal. Although the analog voice signal bandwidth is only 3400 kHz wide, early systems used much wider channels because of the limitations of RF filter technology. The wide channel bandwidths limited the number of channels available in the fixed frequency spectrum, limiting system capacity. Advances in technology reduced channel bandwidth to one fourth of the original requirement, allowing four times as many channels to be packed into the same frequency spectrum and four times as many customers to be served at one time by a

given transmitter. Despite the advances of technology, demand continued to exceed capacity, particularly in densely populated urban areas. New ways of increasing system capacity were needed to make mobile radio practical on a widespread basis. [3]

The allocated frequency spectrum and channel bandwidth are the determining factors for system capacity. Channel bandwidth had already been improved by a factor of four. The frequency spectrum and the channel capacity associated with it could be reused by another transmitter in the same general area if the transmitters were far enough apart to guarantee no interference. Bell Labs introduced the concept of using reduced power transmitters to serve the same number of customers, but in a smaller area, increasing the number of users per unit area. The lower power transmitters allowed frequency spectrum to be reused by another transmitter much closer to the original transmitter. Since the new service area for the low power transmitter is much smaller than the service area for the high power transmitter, channels can be reused again within the former (larger) service area. The resulting increase in capacity was the key to making mobile radio practical for the large number of users existing today. [3]

### 2. Why Digital

In Europe, lack of standardization was an overriding concern for cellular radio . There were many different analog systems operating throughout Europe, all of them incompatible. Traveling from one country to another using the same mobile phone was impossible. The Global System for Mobile (GSM) was developed as a digital solution to Europe's roaming problem. It has achieved broad success not only in Europe but in most of Asia as well and is by far the most widely accepted cellular standard.[3]

In the U.S., the primary motivation for the development of digital cellular was capacity. The exploding growth in demand for cellular phones in large cities such as Chicago, New York, and Los Angeles exceeded the capacity of the analog Advanced Mobile Phone System (AMPS). The introduction of the more spectrally efficient U.S. Digital Cellular (USDC) allowed for three users per channel versus one for AMPS, tripling system capacity. [3]

Additional features of digital cellular include enhanced security and more sophisticated services. Anyone with an FM receiver tuned to the appropriate frequency can eavesdrop on an analog cellular call. Digital phones are more difficult to monitor and allow for the addition of cryptography to safeguard privacy. Digital technology makes caller identification and data services such as paging and

email possible. Digital cellular can take advantage of forward error correction coding to enhance signal quality and link reliability. [3]

### 3. Why Wideband

The popularity of mobile phones and the internet has resulted in a demand for internet access via mobile phones. People will want mobile access to the same things they access on their personal computers: data, images, and full-motion video in addition to voice.

Existing narrowband digital cellular systems were designed for voice transmission. Their ability to transfer data is limited to short pages or email at low data rates. Future systems will require much higher data transmission rates to support a wide variety of multimedia applications. Wideband cellular usage may be described as either person-to-person or person-to-application. Person-to-application uses may include showing a factory or product to a prospect over the web or software applications sharing between employees at different locations working simultaneously on the same document. Many of the military applications for wireless cellular described previously require transmission of large volumes of data. Downloading aircraft maintenance information or interfacing with shipboard databases from locations throughout the ship require much more bandwidth than existing digital systems can provide, particularly over large areas. Person-to-person applications may include video teleconferencing between military commanders to coordinate an operation, telemedicine from a ship or isolated location, or remote training such as the distance learning classes held at the Naval Postgraduate School with students from organizations on the east coast.

Existing wireless local area network technology can provide many of the services described above. However, mobility is limited to short distances and slow (walking) speeds. Multimedia operation over a wide area at vehicular speeds requires a different solution for third generation cellular systems. Multimedia requires at least 100 kbps bandwidth, far more than the 9.6 and 14.4 kbps utilized by the latest Personal Communications Systems for data services. The International Telecommunications Union (ITU) of the United Nations is working to develop a standard for a global mobile multimedia communications network capable of 384 kbps initially, and ultimately up to 2 Mbps. Called International Mobile Telecommunications System 2000 (IMT2000), it forms the basis for the third generation of cellular systems. [1][2][4]

### 4. History of Cellular

1946: The first mobile telephone service was introduced in 25 cities in the U.S. Each system consisted of a high power transmitter on a tall tower with a 50 km coverage area. Channel bandwidth was 120 KHz due to limitations in filter technology. The half-duplex system used frequency modulation (FM). [3]

1950: Improved technology reduced channel bandwidth to 60 kHz.[3]

1950's and 60's: AT&T Bell Labs developed the cellular concept of dividing the service area into small cells in order to reuse portions of the frequency spectrum.[3]

1960's: Channel bandwidth was reduced to 30 kHz.[3]

1970's: Advances in circuit fabrication, filter, and low noise amplifier technology made mobile radio practical.[3]

1979: Nippon Telephone and Telegraph deployed the world's first cellular system in Japan. The system consisted of 660 FM full duplex channels in the 800 MHz band. Channel bandwidth was 25 kHz.[3]

1981: The Nordic Mobile Telephone System (NMT-450) was established in Sweden. It consisted of 25 kHz channels in the 450 MHz band.[3]

1983: The Federal Communications Commission (FCC) allocated 666 duplex channels, each having a 30 kHz bandwidth, in the 800 MHz band for cellular systems. Ameritech deployed the first U.S. cellular system in Chicago, called the Advanced Mobile Phone System (AMPS).[3]

1985: The European Total Access Cellular System (ETACS) was introduced. It was virtually identical to AMPS, except for the use of 25 kHz channels versus 30 kHz for AMPS. The narrow channels resulted in reduced signal-to-noise ratio and reduced range. The C-450 system introduced in Germany was incompatible with ETACS. Other European systems introduced shortly thereafter were also incompatible with one another.[3]

1989: The FCC allocated an additional 166 channels for U.S. cellular systems to accommodate growth.[3]

1990's: The Global System for Mobile (GSM) was introduced. One of the most important features of GSM was international roaming, since it was developed as the cellular standard for all of

Europe. It gained wide acceptance throughout Asia as well and has come closer than any of its competitors to becoming the worldwide standard. The U.S. Digital Cellular (USDC) system was introduced in the U.S. and Canada, offering three times the capacity of AMPS. Qualcomm introduced a digital cellular system based on code-division multiple access (CDMA) instead of the time-division multiple access (TDMA) scheme used in GSM and USDC. The Telecommunications Industry Association/Electronic Industries Association Interim Standard 95A (IS-95) is based on the Qualcomm system.[3]

Digital technology has allowed for limited data transfer capabilities to be added to second generation cellular systems. Such systems are commonly referred to as Personal Communications Systems (PCS). GSM1800 (PCS1800) was developed in the United Kingdom to add data service features to GSM in the 1800 MHz band. The Cellular Packet Data System was developed in the U.S. to transmit data packets over cellular phone channels when they were not being used for voice traffic. The FCC allocated additional spectrum in the 1900 MHz band for PCS. The PCS1800 system was converted to the 1900 MHz band and renamed PCS1900 for U.S. use. [3]

The goal of third generation cellular systems is to provide voice, full motion video, data transfer, and internet access via a mobile wireless system from anywhere in the world. First generation cellular systems such as AMPS provided practical analog voice service. Second generation systems such as GSM, USDC, and Qualcomm's CDMA incorporated digital technology that increased capacity and allowed for additional features such as data transfer. Third generation cellular systems are being developed to meet the goal of global mobile multimedia communications.

### 5. Basic Cellular System Architecture

A call to a mobile subscriber can originate from one of three locations: the Public Switched Telephone Network (PSTN), another mobile being served by the same base station, or another mobile being served by a different base station. A call from a mobile likewise can only go to one of the same three locations. All mobiles within a given service area interface directly with a designated base station. Several base stations interface with one Mobile Switching Center (MSC), which interfaces with the PSTN. A call from one mobile to another mobile served by the same base station is routed through that base station, with administrative support from the MSC. A call from a mobile being served by one base station to a mobile being served by a different base station is routed through the MSC connecting the two

base stations. A call to a mobile being served by another MSC or to a non-mobile is routed through the PSTN.

### 6. How A Call Is Made

A cellular call consists of a call setup to establish the communications link and data transfer after the link has been established. After power is turned on, the cellular phone must synchronize with the nearest base station to establish timing and phase reference that enable it to communicate with the base station. After synchronizing with the strongest base station signal in the area, the mobile has all the information necessary to set up a link. If the mobile wishes to place a call, it sends the base station an alert. The base station acknowledges the alert and asks for authentication information to verify the identity of the mobile and bill the call. All of the preceding call setup functions occur over control channels used specifically for establishing and maintaining the link. Upon receiving the required authentication information, the base station assigns a traffic channel to the mobile. The mobile tunes to the assigned channel, and data transfer begins. If the call originates from the base station, the procedure is the same, except that the base station alerts the mobile to the incoming call, and the mobile acknowledges the alert in addition to providing the authentication information.

The MSC connects several base stations in the same area together, and to the PSTN. The MSC uses the Home Location Register and Visitor Location Register databases to authenticate and bill calls. In addition, the MSC coordinates handoffs among base stations whenever necessary.

### 7. Frequency Reuse and Co-Channel Interference

Without frequency reuse, a cellular system can only support the number of customers equal to the total number of channels in the system. For existing U.S. systems, with 25 MHz of spectrum available per provider and 60 kHz channel bandwidth for a duplex channel, a total of 25 MHz / 60 kHz = 416 duplex channels are available. Without frequency reuse, the system can only support 416 customers in the entire service area. Capacity does not come close to meeting demand in large urban areas, particularly during peak hours. The system would be constantly busy and drop a large percentage of calls. [3]

By dividing the service area into smaller cells, the total number of available channels can be subdivided among the cells, and channels reused in areas far enough removed from the original area to prevent interference. In this way, the pool of available channels can be reused repeatedly throughout the

service area. Increasing capacity (channels) per unit area involves only decreasing the size of the area the available channels serve. However, as cells become smaller and closer together, channels using the same frequency begin to interfere with one another and signal quality suffers. This is referred to as co-channel interference. Decreasing cell size also requires more cells to cover the service area, with more base stations and supporting infrastructure. The following equations quantify the relationship between capacity, cell size, and co-channel interference. The total number of channels available is given by [3]

$$S = kN \tag{1.1}$$

where k is the number of channels per cell and N is the number of cells the service area is divided into, or cluster size.

The relationship between capacity and cluster size/cell configuration is described by the co-channel reuse ratio Q: [3]

$$Q = D/R = \sqrt{3N} \tag{1.2}$$

where D is the distance between cells using the same channels and R is the cell radius. A smaller Q corresponds to increased capacity and increased co-channel interference. A larger Q corresponds to decreased capacity but better transmission quality due to less co-channel interference.

In general, co-channel interference is a function of cell radius R, distance between cells using the same channels D, and the number of interfering cells, $i_0$. Co-channel interference is also a function of cluster size N since cluster size is inversely proportional to cell radius and directly proportional to distance between cells using the same channels as shown in equation (1.2). If it is assumed that the transmit power of each base station is equal, path loss is the same throughout the coverage area, and only omni-directional antennas are used, then considering only the first layer of interfering cells, where all the interfering base stations are equidistant from the desired base station, the worst case co-channel signal-to-interference ratio for the forward channel is described explicitly by: [3]

$$\frac{S}{I} = \frac{(D/R)^n}{i_0} = \frac{\left(\sqrt{3N}\right)}{i_0} \tag{1.3}$$

where n is the propagation loss factor. Thus, capacity can be increased with frequency reuse up to a limit where cells using the same frequency become too close together. At that point, interference becomes too great to meet the signal-to-co-channel interference ratio required for a reliable communications link.

### 8. Fading

Fading is one of the primary obstacles facing any cellular system. Fading is the rapid fluctuation of a radio signal due to multipath propagation or doppler shift. Signal fluctuations can decrease the signal level, causing errors that degrade signal quality. Severe fading can result in a dropped call. Multipath propagation and doppler shift are both a result of the mobile nature of cellular communications. Cellular systems must operate in cities with numerous buildings and other obstacles that reflect the signal. With one side of the link mobile, it is not possible to locate the transmitter and receiver to avoid obstructions as with satellite and microwave systems. The relative motion between the mobile transmitter/receiver and fixed base station results in doppler shift, an additional source of fading. [3]

#### *a. Multipath Fading*

Multipath fading is due to the arrival of several time delayed versions of the same signal due to reflections off the ground or nearby obstructions. The different versions add vectorally at the receiver, resulting in constructive and destructive interference. Destructive interference may cause amplitude variations of up to 20-30 dB which in turn require a 20-30 dB increase in transmit power to compensate. The severity of the fade is related to how much the different versions of the signal are delayed. The rms delay spread $\sigma$ quantifies the magnitude of the delay of the reflected versions of the signal. Different locations have different obstructions and terrain features, resulting in widely varying and difficult to predict values of rms delay spread. The rms delay spread $\sigma$ must be much less than the symbol period $T_S$ to avoid severe fading: [3]

$$T_S >> \sigma \qquad (1.4)$$

Another way to describe mulipath fading is in terms of channel coherent bandwidth $B_C$. The symbol period $T_S$ is inversely proportional to the signal bandwidth $B_S$. The rms delay spread $\sigma$ is inversely proportional to channel coherence bandwidth $B_C$. Channel coherence bandwidth describes the frequency range over which the channel affects all frequency components in the same manner.

If signal bandwidth exceeds the channel coherence bandwidth, some frequency components of the signal are affected differently by the channel than others, and frequency selective fading results. Frequency selective fading requires equalization to compensate. If the signal bandwidth does not exceed the channel coherence bandwidth, all frequency components are affected in the same manner by the channel, and flat fading results. Flat fading is the desired condition, and no compensation is required. For flat fading,

$$B_S << B_C \tag{1.5}$$

Wideband cellular requires increased signal bandwidth to achieve data rates necessary for multimedia applications, and exceeding the coherence bandwidth of the channel is a primary consideration. Multipath effects are strongly dependent upon the surrounding area and vary greatly from place to place. [3]

### *b. Doppler Spreading*

Doppler spreading is due to the relative motion between the transmitter and receiver. The channel is characterized in terms of the channel coherence time $T_C$, the time over which the channel's effects on the signal remain constant. Channel coherence time is inversely proportional to doppler shift caused by the relative motion between the transmitter and receiver:[3]

$$T_C \ \alpha \ 1/f_d \tag{1.6}$$

where $T_C$ is the channel coherence time, $f_d$ is $v\cos\theta/\lambda$, $v\cos\theta$ is the radial velocity of mobile, v is the velocity of mobile, $\theta$ is the angle between direction of travel of mobile and base, and $\lambda$ is the wavelength of the signal.

If the channel characteristics change between the beginning and end of the symbol period, time selective fading, or fast fading, results. Fast fading is very difficult to compensate for. If the symbol duration is less than the channel coherence time, slow fading results, and no compensation is required. For slow fading,[3]

$$T_S << T_C \tag{1.7}$$

Fast fading will be less of a problem with wideband applications since the symbol duration decreases with increasing data rate. The system can support a smaller channel coherence time, or more doppler shift in the link, and still maintain the slow fading condition.

## B. OBJECTIVE

In this thesis, a conceptual design for a wideband cellular system that is resistant to frequency-selective fading and maximizes use of available bandwidth is presented. The system reliably supports voice, data, and video applications in a mobile environment.

## C. APPROACH

Many aspects of the design are based on the Telecommunications Industries Association/Electronics Industry Association Interim Standard 95A (IS-95) and scaled appropriately for wideband applications. The design described in this thesis differs from the IS-95 standard in the following respects:

- IS-95 is a narrowband system with a maximum bit rate of 9600 bps. In this thesis, a wideband system that supports bit rates up to 1.92 Mbps per user is described.
- Multiple carriers are utilized to minimize frequency selective fading. IS-95 uses one carrier.
- A dual mode reverse channel and demand assignment to are incorporated to maximize use of available bandwidth. IS-95 does not have these features.

Chapter II provides an overview of existing narrowband systems and planned third generation wideband cellular systems and standards. Chapter III describes the forward channel design for the wideband cellular system that is the focus of this thesis. Chapter IV describes the reverse channel design, and Chapter V describes the frame structure. Chapter VI provides a summary and conclusions.

# II. OVERVIEW OF EXISTING DIGITAL CELLULAR SYSTEMS

## A. GSM

### 1. System Description

GSM is a second generation digital cellular system standard that was developed to solve the fragmentation problems of the first cellular systems in Europe. Digital modulation allows the use of forward error correction (FEC) coding to reduce the bit error rate (BER) for a given signal to noise ratio (SNR). Voice quality and link reliability vary proportionally with BER. FEC coding results in a lower required SNR to maintain the BER necessary for acceptable signal quality and link reliability. For example, GSM requires only 11 dB of SNR versus 18 dB for AMPS. A lower minimum SNR implies that more co-channel interference can be tolerated, allowing system designers to spaces cells that use the same frequencies closer together. Closer cell spacing per unit area translates to higher frequency reuse and increased system capacity. FEC coding requires the addition of redundant bits to the information stream, resulting in increased signal bandwidth for a fixed information rate. The benefits of FEC coding more than justify the tradeoff, particularly given compensating bandwidth reduction provided during speech coding and modulation.

GSM uses a Gaussian minimum-shift keying (GMSK) digital modulation scheme that is more spectrally efficient than the analog frequency modulation (FM) scheme used in AMPS. GMSK requires less frequency spectrum per channel, allowing more channels to be packed into the allocated spectrum.

The spectrum for GSM consists of two 25 MHz bands:

890-915 MHz for the reverse link (mobile to base station)

935-960 MHz for the forward link (base station to mobile)

Forward/reverse channel pairs that constitute a two-way, or duplex, channel are separated by 45 MHz to prevent crosstalk between channels. Each one-way (simplex) channel is 200 kHz wide, resulting in 50MHz / 200 kHz = 250 simplex channels, or 125 duplex channels. GSM utilizes TDMA to allow eight users to time-share one channel on a rotating basis, increasing total capacity to 8 X 125 = 1000 duplex channels. The actual number of channels is slightly less due to guard bands that provide separation between channels to prevent adjacent channel interference. The overall channel data rate is 270.833 kbps,

or 270.833 / 8 = 33.854 kbps per user, including overhead bits added for coding and link management functions. The output channel data rate per user is 24.7 kbps; insufficient for wideband data applications. [3]

### 2. Traffic and Control Channels

Forward and reverse channels can be characterized as either traffic channels or control channels. Control channels are used to establish and maintain a reliable link. Traffic channels carry user traffic. GSM control channels can be further divided into one of three types: Broadcast Control Channel (BCCH), Common Control Channels (CCCH), and Dedicated Control Channels (DCCH). [3]

The BCCH broadcasts timing, synchronization, and base station and network identification that the mobile needs upon initial power-on to determine which base station is closest and establish a link with it. The BCCH exists only on the forward channel. After tuning to the strongest base station and receiving the required information on the BCCH, the mobile synchronizes with the base station. The mobile is then ready to send or receive calls.

The CCCH is used for call setup on the forward and reverse channels. All mobiles in the same cell share the same CCCH via a random access protocol. On the forward channel, the base station uses the CCCH to alert the mobile of an incoming call. The mobile uses the CCCH on the reverse link to acknowledge the alert, and the base station assigns the mobile to a DCCH to complete call setup. On the reverse channel, a mobile wishing to place a call notifies the base station, and the base station assigns a DCCH to complete call setup. [3]

A DCCH is used by only one mobile at a time. There are three types. The Stand-alone Dedicated Control Channel (SDCCH) is used to maintain the link while the base station sets up a traffic channel for the mobile. The Slow Associated Control Channel (SACCH) sends slow but regularly changing control information such as power level instructions and timing updates to the mobile on the forward channel. It also carries information about the signal strength of the mobile and neighboring cells over the reverse link to aid in handoff decisions. Fast Associated Control Channel (FACCH) data consists of control signals such as handoff instructions and is sent in place of voice traffic over the Traffic Channel (TCH). [3]

### 3. Multiplexing

GSM utilizes TDMA to allow eight users to time-share one channel. Each user has the channel to himself for a short time, called a time slot. At the end of his time slot, the first user stops transmitting and the next user transmits for the same amount of time, and so on, until all eight users have had a chance to transmit. Then the first user gets another turn, and the cycle repeats. Each of the eight users transmits once per cycle. The amount of time allotted for one cycle is called a frame. GSM frames are 4.615 ms long. Each user's slot is 0.5769 ms. Each user can transmit for 0.5769 ms and then must wait 4.038 ms before transmitting again. At GSM's channel data rate of 270.833 kbps, each user can transmit 270.833 kbps X 0.5769 ms = 159 total bits per time slot, including overhead bits. Of the 159 bits, 114 are used for traffic and the rest are used for overhead such as error correction, encryption, synchronization, signaling, and guard bits. [3]

Each group of 26 consecutive GSM Traffic Channel (TCH) frames are grouped together and referred to collectively as a traffic multiframe. Two of every 26 frames are reserved for SACCH data. In this way control functions that need to be sent regularly, but not every frame cycle, are accomplished efficiently without wasting channel time. Fifty–one multiframes (1326 frames) make up a superframe, and 2048 superframes make up a hyperframe. A hyperframe consists of over two million frames and takes over three hours to cycle through. GSM encryption algorithms are based on frame numbers and require sequences with the long periods such as hyperframes to provide adequate security. [3]

### 4. Speech Coding

Data multiplexed into the time slot begins as an analog voice signal. The speech coder samples, quantizes, and codes the voice signal, resulting in a digital representation consisting of a number of bits. The output of the speech coder is channel encoded, interleaved, and modulated prior to transmission. An analog voice signal occupies 3400 Hz of bandwidth. Normal digital telephony used by the PSTN samples the voice signal 8000 times/sec. The amplitude of each sample is then represented by an eight bit binary word (quantization), resulting in a data rate of 8000 X 8 = 64 kbps. A data rate of 64 kbps requires 128 kHz of bandwidth in the frequency spectrum for a binary phase-shift keyed modulation scheme. The GSM speech coder compresses the data, thus reducing the frequency spectrum required to support one channel and maximizing the number of channels that can be packed into the allotted frequency spectrum. The

coder breaks the analog voice signal into 20 ms blocks and represents each block with 260 bits after sampling, quantization, and coding. The resulting bit rate is 260 bits / 20 ms = 13 kbps versus 64 kbps for normal digital telephony using Pulse Coded Modulation (PCM). [3]

### 5. Forward Error Correction Coding

Additional bits are added to the data stream to allow the receiver to correct bits that are lost or corrupted in transmission due to interference or fading. BER is reduced at the cost of additional bandwidth and complexity. Of the 260 bits from the speech coder output, the first 50 bits have three parity bits added for Cyclic Redundancy Check (CRC) error detection. The next 132 bits out of the coder are appended to the 53 bits and four trail bits are added, resulting in 189 bits (note that 78 bits are still left from the original coder output). The 189 bits are fed into a ½ rate convolutional encoder which produces 378 coded bits as its output. The remaining 78 bits from the speech coder are appended to the 378 coded bits, resulting in a total of 456 bits. Thus, 456 coded bits represent 20 ms of voice traffic. The bit rate at the output of the channel coder is 456 bits / 20 ms = 22.8 kbps. Note that the data rate is still less than 64 kbps, even with the added reliability of FEC coding. [3]

### 6. Interleaving

The 456 bits out of the encoder undergo interleaving to minimize the effects of burst errors caused by fading or interference. FEC coding can only correct a limited number of burst errors for each 20 ms block of voice data. A deep fade can result in the loss of a large number of consecutive bits which may exceed the number of bit errors the code can correct. The goal is to limit the number of bit errors in the data block associated with one speech frame. The 456 bits are divided into eight 57- bit blocks and spread over the eight consecutive time slots. Even if all of the bits in one time slot are lost due to fading, only 1/8 of the bits in each speech frame will be affected. Enough bits in the other slots will be recovered correctly to allow the error correction code to correct the lost bits. [3]

### 7. Encryption

Encryption is another example of a service made possible by a digital cellular standard. In GSM, two types of algorithms are used. The A3 algorithm is used for mobile authentication using keys held at the MSC, and the A5 algorithm is used to scramble coded information prior to transmission. [3]

### 8. Modulation

GSM utilizes GMSK modulation. GSM uses a Gaussian pulse-shaping filter to minimize the bandwidth occupied by the modulated signal. The Gaussian filter smoothes the frequency transitions which would otherwise spread energy into adjacent channels. Without Gaussian pulse shaping, GSM would require wider channels to prevent adjacent channel interference. The narrower bandwidth required for each channel allows for more channels within the allocated frequency spectrum, resulting in additional capacity. The channel bit rate for GSM is 24.7 kbps. [3]

## B. USDC

### 1. System Description

USDC was developed as a result of the inability of AMPS to support the capacity required in large cities in the U.S. USDC utilizes TDMA to support three users in each AMPS channel, thereby tripling capacity. USDC shares the same frequency spectrum, frequency reuse plans, and base stations with AMPS. USDC further ensures compatibility with AMPS by using the same signaling and control channels (10 kbps FSK with Manchester coding). The same base stations and mobile phones can support AMPS and USDC. The original intent was to gradually replace AMPS with USDC on a channel by channel basis. Smooth transition from analog to digital was the key consideration. The dual mode USDC/AMPS system was standardized as Interim Standard 54 (IS-54) by the Electronic Industries Association and Telecommunications Industry Association (EIA/TIA). Providers in large cities with capacity shortages aggressively replaced AMPS channels with USDC. Rural areas with sufficient AMPS capacity have been slower to change. The introduction of Narrowband Amps (N-AMPS) and Interim Standard 95 (IS-95) has also slowed implementation. N-AMPS is a modified AMPS analog system that achieves the same capacity as USDC by reducing channel width to 10 kHz. Reduced channel bandwidth is obtained by reduced frequency deviation, which reduces system SNR. Voice companding is used to compensate for the reduced SNR and maintain signal quality. IS-95 is addressed in section C.

Like GSM, USDC uses two 25 MHz bands, with forward and reverse channel pairs separated by 45 MHz:

824 – 849 MHz (mobile to base)

869 – 894 MHz (base to mobile)

Each channel is 30 kHz wide. A total of 25 MHz / 30 kHz = 832 duplex channels are available. The FCC mandates that each service area be shared by two competing companies. Each provider gets 416 channels. Each channel is time-shared among three users in a 40 ms cycle, or frame, divided into six time slots. Each provider can accommodate 416 X 3 = 1248 users, versus 416 for AMPS and 1000 for GSM. Channel bit rate is 48.6 kbps, including overhead. The data rate for voice data alone (no overhead) is 7.95 kbps per user. [3]

### 2. Control Channels

In addition to the 42 analog primary control channels provided by AMPS, USDC specifies an additional 42 secondary control channels that may be dedicated for USDC use only. Thus USDC has twice as many control channels available as AMPS. [3]

### 3. Multiplexing

USDC uses time-division multiplexing to maximize use of channel bandwidth. The basic scheme is similar to GSM. The frame is 40 ms long and contains six time slots, each 6.67 ms long. At the USDC channel data rate of 48.6 kbps, each user can transmit 48.6 kbps X 6.67 ms = 324 bits per slot. The user must then wait 40 – 6.67 = 33.33 ms before his turn comes again. In practice, each USDC user gets two non-consecutive time slots versus one to guarantee minimum voice quality. Of the 324 bits, 260 represent speech and the rest are devoted to overhead such as guard bits, synchronization, and SACCH signaling. [3]

### 4. Speech Coding

The speech coder samples, quantizes, and codes 20 ms of analog voice data at a time using a Vector Sum Exited Linear Predictive (VSELP) algorithm. The coder produces 159 bits, representing 20 ms of analog voice data. The resulting data rate is 159 bits / 20 ms = 7.95 kbps at the speech coder output. [3]

### 5. Forward Error Correction Coding

The 159 bits from the speech coder are divided into 77 Class-1 bits and 82 Class 2 bits. The 77 Class-1 bits are fed into a ½ rate convolutional encoder. The 12 most significant bits of the 77 Class-1 bits are coded with a 7 bit CRC error detection code and also fed into the convolutional encoder. The convolutional encoder produces 2 X (12+77) = 178 coded output bits. The remaining 89 Class-2 bits are appended to the 178 bits without coding. The 178 + 82 = 260 bits result in a data rate of 260 bits / 20 ms = 13 kbps at the coder output.

Control data may be sent in place of voice data via the FACCH. Forty-nine bits of FACCH data are sent instead of the voice data, appended with a 16 bit CRC to form a 65-bit word. The word is fed into a ¼ rate convolutional code, which produces 4 X 65 = 260 coded bits. [3]

### 6. Interleaving and Modulation

The channel coded speech data is interleaved over two time slots. Each time slot contains half the data from two sequential speech coder frames. USDC uses Π/4 differential quadrature phase-shift keying to maximize spectral efficiency. The following table compares GSM and USDC specifications.

Table 2.1 Comparison of GSM and USDC Specifications

| | GSM | USDC |
|---|---|---|
| Allocated Frequency Spectrum | 50 MHz | 50 MHz |
| Channel Bandwidth | 200 KHz | 30 KHz |
| Total # of Duplex Channels | 125 | 416 |
| Total # Users | 1000 (8 users per channel) | 1248 (3 users per channel) |
| Speech Coder Output Data Rate | 13 Kbps | 7.95 Kbps |
| Channel Coder Output Data Rate | 22.8 Kbps | 13 Kbps |
| Overall Channel Data Rate | 270.833 Kbps | 48.6 Kbps |
| User Data Rate | 24.7 kbps per user | 7.95 kbps per user |

## C. IS-95

### 1. System Description

The CDMA cellular standard developed by Qualcomm was standardized as Interim Standard 95 (IS-95) by the U.S. Telecommunications Industry Association (TIA). IS-95 differs significantly from GSM and USDC in that it uses CDMA versus TDMA. In CDMA, each transmitted signal is spread over a much wider bandwidth than the bandwidth of the baseband data signal through multiplication by a digital code that has a much higher rate than the data. The maximum power level of the transmitted signal decreases by the same factor as the frequency spreading. Multiple users are prevented from interfering with one another and differentiated from one another on the basis of the pseudo random (PN) orthogonal code used by the

transmitter to spread the signal. The receiver multiplies the incoming signal by the same PN code used to spread the signal. A signal with the corresponding PN code will correlate and be despread by the receiver, recovering the original signal. Signals spread by different PN codes or no PN codes will not correlate when multiplied by the PN code at the receiver. The uncorrelated signals appear as low amplitude noise at the receiver output. [3]

CDMA offers many possible advantages. Since the signal is spread over a large spectrum, narrowband interference and fading will only affect a small portion of the signal. Delayed versions of the original signal due to multipath will not correlate well at the receiver and will be rejected as noise. In fact, CDMA systems may employ RAKE receivers to combine the information from several multipath components and improve the performance of the system. Since users are differentiated via PN codes vice frequency or time slot, all users can occupy the same cell and frequency planning is unnecessary. [3]

CDMA was designed to be compatible with AMPS via dual mode phones. IS-95 occupies 2.5 MHz of the 50 MHz allocated to the U.S. cellular spectrum. It uses the same frequency spectrum as AMPS and USDC:

824 –849 MHz (mobile to base)

869 – 894 MHz (base to mobile)

The maximum user data rate is 9.6 kbps, spread to a channel bit rate of 1.2288 Mcps. [3]

IS-95 allows for variable user data rates based on voice activity and network loading. The IS-95 standard calls for different modulation and spreading schemes for the forward and reverse channel. The forward channel (base to mobile) uses coherent detection and quadrature modulation. Walsh-Hadamard functions are used to ensure orthogonality among users. The reverse channel (mobile to base) uses noncoherent detection and 64-ary Walsh-Hadamard orthogonal modulation. [3]

IS-95 also differs from GSM and USDC in that it employs soft versus hard handoffs. When GSM and USDC determine that a neighboring cell can provide a better link for a mobile due to the mobile's changing location, interference, or fading, the existing link is dropped and a new link quickly established with the new base station. The speed of the transfer is usually transparent to the subscriber. IS-95 maintains a link with both base stations while making the transition. [3]

### 2. Forward Channel

The forward IS-95 channel consists of a pilot channel to provide phase reference for coherent demodulation, a timing synchronization channel, up to seven paging channels for call setup, and up to 63 traffic channels. [3]

After source coding the signal is channel encoded using a rate ½ convolutional code. IS-95 supports user data rates of 1200, 2400, 4800, and 9600 bps. The speech coder exploits pauses and gaps in speech, and reduces its output from 9600 to 1200 bps during silent periods. To maintain a constant baseband output symbol rate of 19.2 kbps, whenever the user data rate is less than 9600 bps each symbol from the convolutional encoder is repeated prior to block interleaving. If the user data rate is 9600 bps, the data is forwarded directly to the interleaver. If the user data rate is 4800 bps, the data is repeated twice before going to the interleaver. The output of the interleaver is 19.2 kbps regardless of the user data rate. [3]

A long PN code with a period of $2^{42}$-1 is generated by the product of a 42 bit mask provided by the mobile and a 42 bit state vector in the sequence generator. There are two types of masks. The public mask corresponds to the Electronic Serial Number (ESN) of the mobile and is used for authentication during call setup. The private mask corresponds to the Mobile Identification Number (MIN) and is used after successful authentication has been performed. Thus, the long code is uniquely assigned to one user, and is used to separate that user from all the others in that cell. [3]

The long code is multiplied with the output of the block interleaver. The resulting signal is multiplied by one of 64 orthogonal 64-bit Walsh-Hadamard sequences to ensure that users don't interfere with others sharing the same cell. Each Walsh-Hadamard sequence of 64 bits equates to one of the 64 channels in the cell. [3]

The final step prior to transmission is quadrature modulation. Symbols from all channels are multiplied by two short PN codes of length $2^{15}$-1. The short PN codes distinguish the cell from other cells sharing the same frequency and prevent co-channel interference between them. One of the short PN codes forms the in-phase (I) channel and the other forms the quadrature (Q) channel. The short length of the PN code facilitates rapid acquisition of the pilot sequence by the mobile. [3]

### 3. Reverse Channel

The reverse channel differs from the forward channel in several respects. A 1/3 rate convolutional encoder is used instead of a 1/2 rate encoder because the lower power of the mobile requires additional error correction capability. The data rate of the coder output is 28.8 kbps versus 19.2 kbps for the forward channel. After interleaving, each group of 6 bits is represented by one of 64 Walsh-Hadamard 64-bit sequences. Thus, the Walsh-Hadamard matrix provides 64-ary orthogonal modulation. The data rate at the output of the Walsh-Hadamard modulator is 28.8 kbps * 64 Walsh-Hadamard chips / 6 bits = 307.2 kcps. The modulated data is spread by the long code to distinguish users within the cell, spread by the I and Q short codes to prevent interference with other cells, and transmitted. [3]

## D. PCS

### 1. Second Generation Systems with Added Features

The objective of PCS is to provide wireless communications enabling users to access the telephone network for different types of communications needs without regard for location or the type of information. Existing PCS systems are taking advantage of modern digital technology to incorporate more network features than existing second generation systems, but fall far short of the ultimate goal of allowing any user to make and receive calls or access multimedia from anywhere in the world using a mobile radio. So far, PCS has been mainly limited to caller ID and one-way short messaging services. Cellular Digital Packet Data (CDPD) is a prime example. CDPD provides mobile packet data connectivity to existing first and second generation cellular systems without additional bandwidth requirements by capitalizing on unused air time between successive radio channel assignments. It is estimated that 30 % of the time a cellular radio channel is unused. Packet data may be transmitted on that channel until it is assigned to a voice circuit by the MSC. CDPD directly overlays with the existing cellular infrastructure and uses existing base station equipment, making it inexpensive to install. CDPD occupies a 30 kHz AMPS channel on a secondary, non-interfering basis. Packet channels are dynamically assigned to cellular voice channels as they become vacant. The CDPD channel then 'hops' to the next vacant channel. CDPD channel data rate is 19.2 kbps. [3]

The FCC has allocated the 1850 – 1990 MHz frequency band (140 MHz) for PCS use. The band is divided into six frequency blocks labeled A-F. The blocks are divided into either Major Trading Areas

(MTS's) or Basic Trading Areas (BTA's) based on the Rand McNally Commercial Atlas and Marketing Guide. There are 51 MTA's and 493 BTA's in the U.S. The A,B, and C block licenses are 30 MHz each, and the D, E, and F block licenses are 10 MHz each. To date, the FCC has auctioned all of the 120 MHz spectrum allocated for broadband PCS in the U.S. A breakdown of the broadband PCS spectrum is provided in Table 2.2.[4]

Table 2.2 FCC Broadband PCS Spectrum Allocation

| Block Name | Block Size | Geographic Breakdown |
|---|---|---|
| Block A | 30 MHz | MTA |
| Block B | 30 MHz | MTA |
| Block C | 30 MHz | MTA |
| Block D | 10 MHz | BTA |
| Block E | 10 MHz | BTA |
| Block F | 10 MHz | BTA |

DCS1800 / PCS1800 was developed in the United Kingdom, using an 1800 MHz operating frequency for GSM and adding data messaging features. PCS 1900 is the corresponding system in the 1900 MHz band for the U. S. and Canada. Some GSM carriers offer more extensive services such as email and internet access via laptop at 9.6 and 14.4 kbps. Much higher data rates are required for multimedia. Development is in progress for General Packet Radio Services (GPRS) for GSM. GPRS will provide email and internet access via TCP/IP protocols. The initial channel data rate goal is 56.6 kbps. Ericsson claims 144 kbps has been achieved in its testbed in Sweden. [1][3]

### 2. Third Generation Systems

Until recently, PCS development has consisted of piecemeal efforts with a fragmented overall strategy. Work toward a unified global standard falls under the International Telecommunications Union (ITU). During the 1992 World Administrative Radio Conference (WARC), member countries allocated a 230 MHz block of spectrum for third generation technology in the 2 GHz band: 1885 – 2025 MHz and

2110 – 2200 MHz. The system was initially called Future Public Land Mobile Telecommunications System (FLMPTS), but the name has since been changed to the International Mobile Telecommunications System 2000 (IMT2000). The fundamental concept of IMT2000 is to provide personal mobility using affordable pocket communicators that can access basic services anywhere. IMT2000 is a third generation global digital mobile radio system that will integrate paging, cordless, and cellular systems as well as Low Earth Orbiting (LEO) satellites and existing landline and microwave networks into one universal system. Features of IMT2000 include global roaming and wireless broadband services. IMT2000 accommodates different radio interfaces and interconnections within the backbone network. Wireless access to broadband services such as full motion video and large data transfers at 384 kbps for mobiles is expected. The ITU is still trying to build consensus between member countries regarding basic requirements and the definition of the system. Three regional proposals from Japan, Europe, and North America represent contending standards for third generation cellular technology.[2]

#### *a. Japan*

NTT DoCoMo, the cellular subsidiary of Japan's national carrier, Nippon Telephone and Telegraph, is pushing to develop a system that will verify a third generation cellular system and meet the IMT2000 requirements. Their system is intended to provide high speed multimedia wireless communications including full motion video, voice, and internet access. The goal of the trial phase is to achieve 384 kbps and accommodate 50–100 subscribers for applications such as teleconferencing. Eventually, the data rate will be increased to 2 Mbps. The Japanese standards bodies chose wideband CDMA as the air interface. The CDMA air interface is to be mated with a GSM-based open network architecture. Use of already developed GSM core functions for things such as the Mobile Applications Protocol will speed up system development and take advantage of the huge GSM base already installed in Asia. Such a system will only require modification of existing networks vice wholesale redesign and replacement. The Japanese effort emphasizes fielding and accepting subscribers to the system by 2000 AD. [1][2][5]

#### *b. Europe*

The European Telecommunications Standards Institute (ETSI) is responsible for developing a unified European standard. They would like to repeat the success of GSM, where cooperation

between ETSI and the American National Standards Institute (ANSI) produced a truly global and highly successful standard. The Universal Mobile Telecommunications Systems (UMTS) forum is working on a third generation standard to meet the IMT2000 requirements. Their plan consists of system deployment in two phases. The initial phase in 2002 AD will make most of the third generation features available at a data rate of 300 kbps. The second phase in 2005 AD will provide full multimedia features and interface with Asynchronous Transfer Mode (ATM) network backbones for increased throughput. A Generic Radio Access Network (GRAN) will allow any new third generation technology to link to the global GSM footprint. In February 1998 ETSI members agreed to implement dual proposals for the air interface: wideband CDMA for wide area and mobile applications, and a hybrid CDMA/TDMA solution for low mobility applications such as wireless local area networks.[2][5][6]

#### *c. North America*

A consortium of companies called the CDMA Development Group (CDG) is proposing a third generation system based on the evolution of the existing IS-95 standard. It could be easily adopted where IS-95 is used: North America, Japan, and Korea. The CDG claims it can deliver a data rate of 64 kbps by April 1999 within the existing 1.25 MHz channelization scheme. Beyond that they will require 5 MHz channels and a new standard. They plan to use the existing 1.25 MHz in contiguous fashion to reach the 5 MHz channel requirement for broadband multimedia. Their goal is to achieve 144 kbps with the first iteration and ultimately realize a data rate of 384 – 500 kbps. [2][5]

The CDG wants to work with NTT DoCoMo to achieve a closer compatibility between the next generation Japanese system and IS-95. NTT DoCoMo wants to persuade the Europeans to adopt their system. The Japanese and European concepts are incompatible, and neither is backward compatible with IS-95. Aside from technical considerations, vendors do not like having to license IS-95 technology from Qualcomm.[2][5]

# III. FORWARD CHANNEL CONCEPTUAL DESIGN

## A. DATA CHANNEL

### 1. Overview

The forward channel is designed to support up to 90 simultaneous channels through the use of Walsh-Hadamard (W-H) functions and six independent subcarriers. The six subcarriers provide resistance to frequency-selective fading. A convolutional code is used to reduce random bit errors. Variable bit rates are supported through symbol repetition. An interleaver is used to reduce burst bit error rate. Randomization is provided by a long PN code to enhance security. A short PN code minimizes interference from other cells.

A source bit rate of 64 kbps per user prior to channel encoding is chosen as the basic bit rate and is denoted $s_i$ in Figure 3.1 Eight, 16, and 32 kbps may also be used for very low data rate applications or in severe fading environments where additional diversity through repetition coding is desired.

There are fifteen 64 kbps channels per subcarrier. The number of channels is based on bandwidth constraints and is described in detail later in this section. The channel demultiplexer consists of a serial-to-parallel converter that reduces the total bit rate by a factor of 15 from the maximum of 64 kbps X 15 = 960 kbps to the basic bit rate of 64 kbps, creating 15 separate 64 kbps channels. Reduced basic bit rates of 32, 16, and eight kbps on each channel correspond to bit rates of 480, 240, and 120 kbps, respectively, at the channel demultiplexer input. Bit rate is reduced by a factor of 15 by the channel demultiplexer in each case.

The subcarrier demultiplexer is a serial-to-parallel converter that reduces the bit rate by a factor of six and allows the assignment of six independent subcarriers to reduce susceptibility to frequency-selective fading. The system supports six subcarriers, for a maximum system bit rate of 6 X 960 kbps = 5.76 Mbps. The choice of six subcarriers is based on bandwidth constraints described in detail later in this section. Reduced basic bit rates of 32, 16, and eight kbps at the channel demultiplexer output correspond to bit rates of 480, 240, and 120 kbps, respectively, at the channel demultiplexer input/subcarrier demultiplexer output and bit rates of 2.88 Mbps, 1.44 Mbps, and 720 kbps, respectively, at the subcarrier demultiplexer input. The forward channel can support 15 users per subcarrier X 6 subcarriers = 90 channels simultaneously.

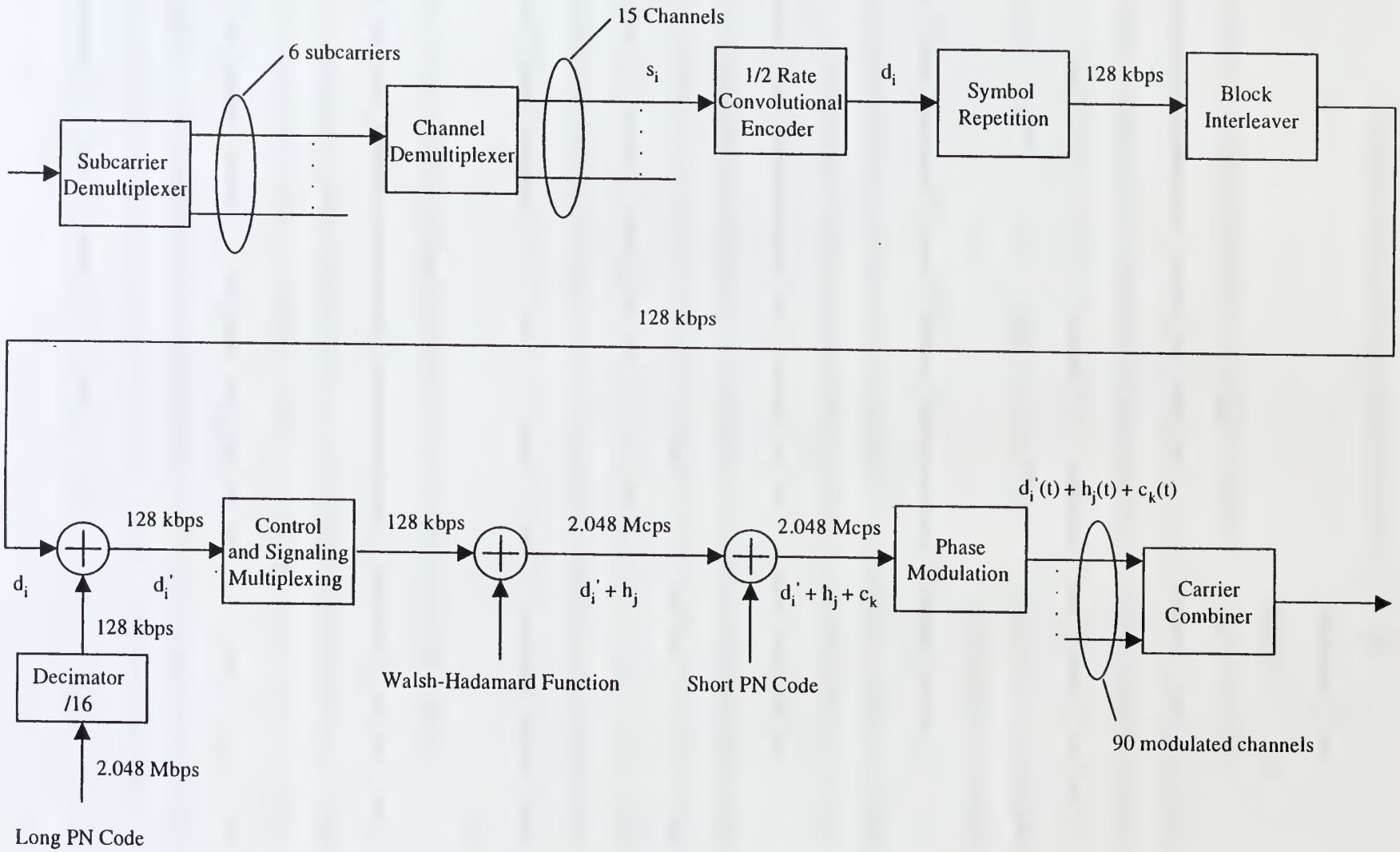


Figure 3.1 Forward Traffic Channel

Users may be assigned more than one channel each. Users may be assigned channels from different subcarriers as well. Of the fifteen total channels on each subcarrier, two are reserved for overhead functions such as synchronization and paging, leaving 13 user channels per subcarrier.

The rate ½, constraint length 9 channel encoder is based on the IS-95 standard. The output bit rate is twice the input bit rate, or 2 X 64 kbps = 128 kbps. The output of the channel encoder is denoted as $d_i$ in Figure 3.1. Signals with reduced basic bit rates of eight, 16, or 32 kbps produce bit rates of 16, 32, and 64 kbps, respectively, at the convolutional encoder output. Reduced bit rate signals are repeated as necessary to deliver a 128 kbps bit rate signal to the interleaver. The interleaver does not affect bit rate. To enhance security, the 128 kbps interleaver output is randomized by a long PN code with a 128 kbps chip rate, or one chip per bit. The bit rate remains 128 kbps. The output after addition of the long PN code is denoted $d_i'$ in Figure 3.1.

An allocated frequency spectrum equivalent to one of the 30 MHz MTA broadband PCS block licenses recently auctioned by the FCC is assumed. Current practice in the U.S. requires a duopoly of two cellular providers to share frequency spectrum in a given area. Thus, each provider may utilize a 15 MHz wide frequency spectrum. Each subcarrier may occupy 15 MHz /6 subcarriers = 2.5 MHz. Each subcarrier may be spread by a factor of 2.5 MHz / 128 kbps = 19 without exceeding the allocated frequency spectrum. Hence, a maximum of 19 W-H chips per bit is indicated. The number of bits in a W-H function must be a power of two. A 16-chip W-H function is chosen because it provides the maximum number of simultaneous users (16 including the pilot tone) without exceeding the allocated bandwidth. The 16 chip W-H function produces a 16 X 128 kbps = 2.048 MHz wide signal after the addition of the W-H function. The six subcarriers occupy 6 X 2.048 MHz = 12.288 MHz, leaving 2.712 MHz for guard bands. The output after addition of the W-H function is denoted by $d_i' + h_j$ in Figure 3.1. The W-H functions are synchronized with the long and short PN codes.

The addition of the short PN code is represented as $d_i' + h_j + c_k$ as shown in Figure 3.1 where k designates the particular cell. The addition of the short PN code has no effect on signal bandwidth since it uses the same 2.048 Mcps chip rate as the W-H code. There is one short PN code chip per W-H chip. The short PN code is chip synchronized with the long PN code and W-H function.

### 2. Subcarrier Demultiplexing

The higher data rate necessary to support wideband cellular requires a proportional increase in the bandwith of the signal. If the bandwidth of the signal exceeds the channel coherence bandwidth in the service area at the time, frequency-selective fading results. Constructive and destructive interference among different multipath components associated with frequency-selective fading produces severe amplitude fluctuations in the signal. The amplitude fluctuations significantly degrade signal quality and may result in a dropped call.

Channel coherence bandwidth may be described in terms of rms delay spread, $\sigma$:

$$B_C \sim 1/\sigma \tag{3.1}$$

References [1] and [2] provide rms delay spread measurements for various locations in Europe and North America. The rms delay spread and associated channel coherence bandwidth values are tabulated in Table 3.1 below. Measurements were taken at 900 MHz. Although somewhat different results would be predicted at 2.5 MHz or at other locations, the measurements provide a useful basis for an initial estimate of maximum allowable signal bandwidth.

Table 3.1 RMS Delay Spread and Channel Coherence Bandwidth at Selected Locations

| Environment | RMS Delay Spread | Channel Coherence Bandwidth |
|---|---|---|
| Average Suburban | 310 ns | 3.2 MHz |
| Worst Case Suburban | 2110 ns | 474 kHz |
| San Francisco (urban) | 25 us | 40 kHz |
| New York City (urban) | 3500 ns | 286 kHz |
| Hamburg, Germany (suburban) | 2.7 us | 370 kHz |
| Stuttgart, Germany (suburban) | 5.4 us | 185 kHz |
| Dusseldorf, Germany (urban) | 4.0 us | 250 kHz |
| Frankfurt, Germany (urban) | 19.6 us | 51 kHz |

To avoid frequency-selective fading, the signal bandwidth must be less than the channel coherence bandwidth. For example, in San Francisco, the channel coherence bandwidth is 40 kHz, so signal data rate cannot exceed 40 kbps. Frankfurt, Germany can support data rates up to 51 kbps, and New York City can support up to 286 kbps. An average suburban area can support up to 3.2 Mbps without encountering frequency-selective fading. Hence, urban areas such as San Francisco, New York City, and Frankfurt, Germany cannot support wideband signals requiring 384 kbps – 2.0 Mbps without experiencing frequency-selective fading unless special care is taken in designing the wideband system.

One solution is to subdivide the carrier signal into several orthogonal subcarriers, each with a bandwidth less than the channel coherence bandwidth. A serial-to-parallel converter divides the incoming information stream among six subcarriers as shown in Figure 3.1. Each subcarrier receives only one of every six information bits. The bandwidth of each subcarrier is one-sixth of the original signal bandwidth. Input data rates may be 5760, 2880, 1440, or 720 kbps, resulting in subcarrier bit rates of 960, 480, 240, or 120 kbps.

Additional compensation for frequency-selective fading may be obtained with equalization at the receiver. Since the mobile fading channel is random and time varying, the equalizer must track the time varying characteristics of the mobile channel. A known, fixed-length training sequence is sent by the transmitter so that the receiver's equalizer may average to a proper setting. The training sequence is a pseudorandom binary signal. Immediately following the training sequence the user data is sent. The adaptive equalizer at the receiver utilizes a recursive algorithm to evaluate the channel and estimate filter coefficients. The training sequence is designed to permit an equalizer at the receiver to acquire the proper filter coefficients in the worst possible channel conditions. When the training sequence is finished, the filter coefficients are near the optimal values for reception of user data. As user data is received, the adaptive algorithm of the equalizer tracks the changing channel. Carrier multiplexing is used to reduce the signal bandwidth as much as possible.

### 3. Channel Demultiplexing

Each subcarrier is further subdivided into 15 "channels" via serial-to-parallel converters, reducing signal bandwidth by an additional factor of 15. Thus, the output data rates of the channel demultiplexer may be 64, 32, 16, or 8 kbps.

### 4. Forward Error Correction Coding

The synchronization channel, paging channel, and forward traffic channel are convolutionally encoded as shown in Figures 3.1 and 3.2. A convolutional encoder is used because because the ability to perform soft decision decoding allows for an additional 2-3 dB of coding gain. The constraint length 9 encoder is the same as the one used in the IS-95 standard [3]. The rate ½ code produces one coded symbol of two bits for every uncoded input bit. Thus, the output bit rate is twice the input bit rate. The encoding process is illustrated in Figure 3.1 where the output for channel i is denoted $d_i$. The initial state of the encoder is the all zero state. The coded output symbols alternate between $c_0$ and $c_1$ in the output data stream. Symbol $c_0$ is produced from generator function $g_0$ and is output first, and symbol $c_1$ is produced from generator function $g_1$. The generator functions $g_0$ = 753 octal = 111101011 and $g_1$ = 561 octal = 011110001. The corresponding polynomials are: [8]

$$P_0(x) = x^8 + x^7 + x^5 + x^3 + x^2 + x + 1 \tag{3.2}$$

$$P_1(x) = x^8 + x^4 + x^3 + x^2 + 1 \tag{3.3}$$

### 5. Symbol Repetition

Symbol repetition is provided if the data rate out of the convolutional encoder is less than the maximum of 128 kbps. Encoder output symbols are repeated as necessary to produce a constant 128 kbps input to the block interleaver. Signals with data rates of 64, 32, or 16 kbps at the encoder output have their symbols repeated two, four, and eight times, respectively.

Symbol repetition provides time diversity in addition to a constant bit rate input to the interleaver. If we can supply the receiver several replicas of the same information signal transmitted over independently fading channels, the probability that all the signal components will fade simultaneously is reduced considerably. If the separation between successive time slots equals or exceeds the coherence time of the channel, multiple repetitions of the signal will be received with independent fading conditions. If one radio path undergoes a deep fade, another independent path transmitted in a different time slot may have a strong signal, since the fading properties of the channel vary with time. By having more than one path to select

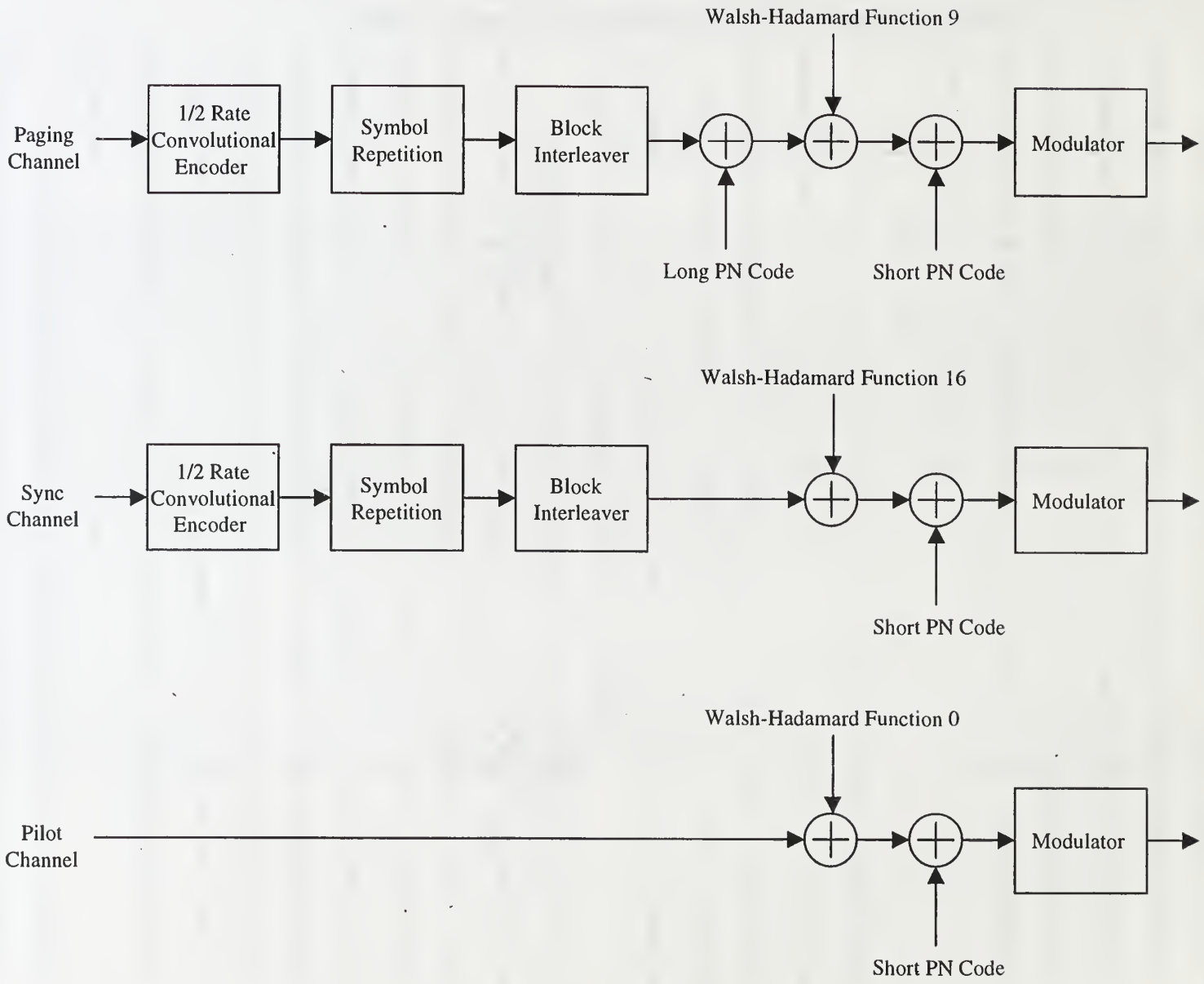


Figure 3.2 Forward Pilot, Paging, and Synchronization Channels

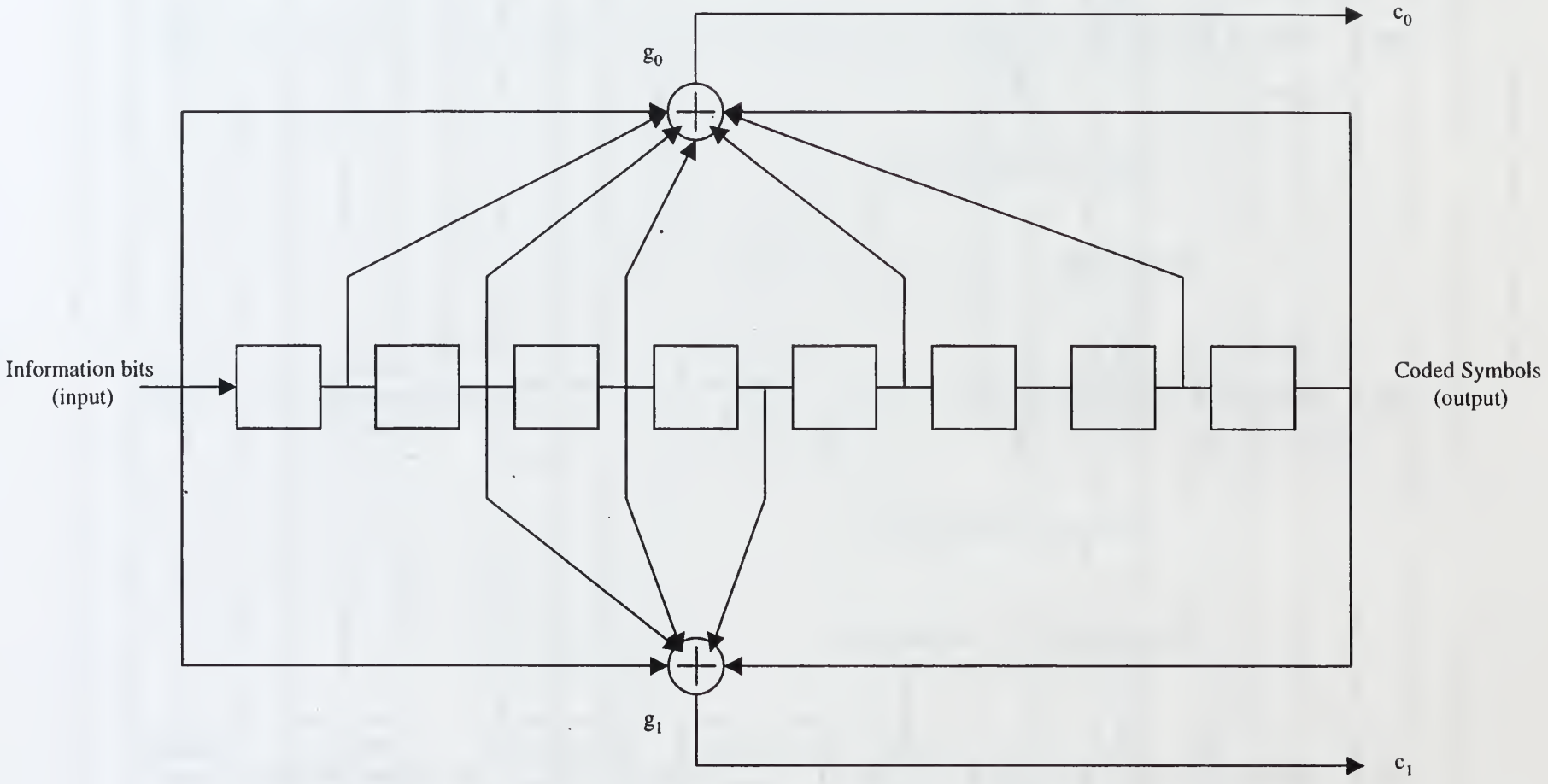


Figure 3.3 Rate 1/2, Constraint Length 9 Convolutional Encoder

from, both the instantaneous and average SNR at the receiver may be improved. Specific examples of the effects of channel coherence time are given in the following section.

One drawback of time diversity through symbol repetition is the added overhead involved with repeated bits. However, in this case, symbol repetition is utilized to provide a constant bit rate to the interleaver with variable bit rate inputs. Basic user source bit rates of eight, 16, and 32 kbps for low bit rate applications are supported by the system in addition to 64 kbps. In severe fading environments, a lower basic bit rate may be used for added time diversity to combat fading. In low data rate applications, however, time diversity is merely an added benefit. [3]

### 6. Interleaving

All symbols on the synchronization channel, paging channel, and forward traffic channel are block interleaved after repetition. Human speech is tolerable to listen to with delays of up to 40 ms. Consequently, an interleaver span of 25 ms is chosen. By way of contrast, an interleaver span of 26.66 ms is used in the IS-95 standard [8]. A block interleaver is used because of the straightforward implementation. A 25 ms span is equivalent to 1600 symbols, or 3200 bits at the symbol rate of 64000 sps. Our system uses a 58 X 58 bit array with a total of 3364 bits, or 1683 symbols.

Encoded source bits are placed into the interleaver by sequentially increasing the row number for each successive bit and filling the columns as shown in Figure 3.4. After the array is completely filled, the symbols are read out one row at a time and transmitted over the channel as shown in Figure 3.5. This has the effect of separating the original encoded source bits in time by 58 bit periods. In both cases the sequence order of bits in the input or output streams may be determined by reading down the columns of the matrix. At the receiver the deinterleaver performs the inverse function to recover the original sequence. Any burst of less than 29 contiguous channel symbol errors, or 58 bits, results in single isolated errors at the deinterleaver output, well within the error correcting capability of the convolutional code. Thus, a fade of duration less than or equal to 29 symbol periods, or 445 μs at 64,000 sps, will result in isolated errors at the receiver.

The channel may be expected to exhibit stable characteristics and affect each bit in an equivalent manner for a time period equal to the channel coherence time $T_C$. If channel coherence time is defined as

| | | |

| | | |

the time over which the time correlation function is above 0.5, then channel coherence time is:

$$T_C = \frac{9}{16\pi f_m} \tag{3.4}$$

where $f_m$ is $v/\lambda$, $v$ is velocity of the mobile subscriber in meters per second, and $\lambda$ is the wavelength of the signal. We also require $T_C >> T_S$, where $T_S$ is the symbol period.

For a vehicle traveling 60 mph using a 2.0 GHz carrier, channel coherence time is 1 ms. The channel may be expected to exhibit the stable characteristics for 1 ms. Bits separated by more than 1 ms are affected differently by the channel and will experience the desired independent fading conditions. The interleaver shown in Figures 3.4 and 3.5 separates successive bits by 445 us, or approximately half the channel coherence time. Increasing the interleaver span to the maximum acceptable delay of 40 ms increases array size to 70 X 70 bits and results in a separation of 547 us between successive bits, still short of the desired goal.

Increasing the array size produces minimal improvement for the additional delay required. The original 58 X 58 bit interleaver provides a modest level of protection without sacrificing signal quality by introducing excessive delay. The design presented utilizes the 58 X 58 bit interleaver to translate burst errors resulting from deep fades of less than 455 us in duration into isolated single bit errors correctable by the convolutional code.

### 7. Data Scrambling

A PN code unique to each user is used to scramble the data stream from the block interleaver on the paging and traffic forward channels. Data scrambling consists of randomization of the bit stream to enhance security and privacy. The 2.048 Mcps PN sequence is applied to a decimator which keeps only the first chip out of every sixteen consecutive chips. The symbol rate from the decimator output is 128 kcps. Data scrambling is by modulo-2 addition of the interleaver output with the decimator output, scrambling the data in a manner unique to that PN code. The resulting randomized output is denoted $d_i'$ in Figure 3.1. Note that adding the PN code scrambles the data but does not spread the signal because the chip rate of the decimator output is 128 kcps, or one chip per bit. The bit rate remains unchanged at 128 kbps. The long PN code chips are synchronized with the W-H chips and the short PN code chips. The decimator allows all three codes to use the same chip rate, simplifying synchronization between them.

The PN sequence uniquely assigned to each user in our system is a code with period $L = 2^{42}-1$ chips. The long code is specified by the same characteristic polynomial used in the IS-95 standard and requires a 42 stage shift register to generate [8]:

$$P(x) = x^{42} + x^{35} + x^{33} + x^{31} + x^{27} + x^{26} + x^{22} + x^{21} + x^{19} + x^{18} + x^{17} + x^{16} + x^{10} + x^{7} + x^{6} + x^{5} + x^{3} + x^{2} + x^{1} + 1 \quad (3.5)$$

Each PN chip of the long code is generated by the modulo-2 inner product of a 42-bit mask and the 42-bit state vector of the sequence generator described above. Two types of masks are used: a public mask and a private mask. There are separate public masks for the paging and data channels. All calls are initiated on the paging channel using the paging channel public mask. After a data channel is assigned the public long code mask is used for authentication. The public long code mask consists of a permutation of the mobile station's electronic serial number (ESN). Transition to the private mask is carried out after authentication is performed. The private mask is a permutation of the mobile station identification number (MIN). [3][8]

### 8. Control and Signaling Multiplexing

Control and signaling information is transmitted over the forward channel in addition to user data. Control messages may be used for link maintenance functions such as power control or handoff instructions or may provide additional user features to be added in the future.

### 9. Orthogonal Spreading

Each convolutionally encoded bit stream transmitted on the forward CDMA channel is spread with a Walsh-Hadamard (W-H) function at a chip rate of 2.048 Mcps to provide orthogonal channelization among all channels. Each data bit is added to one of the W-H functions of Figure 3.6 consisting of 16 bits each, spreading the signal bandwidth by a factor of 16. The output after the addition of the W-H function is denoted as $d_i' + h_j$ in Figure 3.1 where $h_j$ is one of 16 possible 16 chip W-H functions and j=1,2,...,16. The output bit rate is 2.048 Mbps. There are 16 chips per bit. Note that the W-H function has the same chip rate as the short PN code. The long PN code, W-H function, and short PN code chips are synchronized with one another. The W-H chips are synchronized with the long PN code and short PN code chips.

A signal that is spread using W-H function n is assigned to channel number n, where n corresponds to one of the 16 rows of the W-H matrix numbered 0-15. Channel number zero is always assigned to the pilot tone. Channel nine is assigned to the paging channel. Channel 16 is assigned to the synchronization channel. The other 13 channels are assigned to user traffic.

W-H functions provide a convenient way to construct a set of mutually orthogonal waveforms by using a W-H matrix. A one-bit data set can be transformed using orthogonal functions of two digits each as follows:

| Data set | Orthogonal set |
|---|---|
| 0 | |
| 1 | |

$$\mathbf{H}_1 = \begin{bmatrix} 0 & 0 \\ 0 & 1 \end{bmatrix} \tag{3.6}$$

For a two-bit data set, extend the previous W-H matrix:

| Data set | Orthogonal set |
|---|---|
| 0 0 | |
| 0 1 | |
| 1 0 | |
| 1 1 | |

$$\mathbf{H}_2 = \begin{bmatrix} 0 & 0 & 0 & 0 \\ 0 & 1 & 0 & 1 \\ 0 & 0 & 1 & 1 \\ 0 & 1 & 1 & 0 \end{bmatrix} = \begin{bmatrix} \mathbf{H}_1 & \mathbf{H}_1 \\ \mathbf{H}_1 & \overline{\mathbf{H}_1} \end{bmatrix} \tag{3.7}$$

The lower right quadrant is the complement of the prior code word set.

For a three bit data set:

| Data set | | | Orthogonal set |
|---|---|---|---|
| 0 | 0 | 0 | |
| 0 | 0 | 1 | |
| 0 | 1 | 0 | |
| 0 | 1 | 1 | |
| 1 | 0 | 0 | |
| 1 | 0 | 1 | |
| 1 | 1 | 0 | |
| 1 | 1 | 1 | |

$$\mathbf{H}_3 = \begin{bmatrix} 0 & 0 & 0 & 0 & 0 & 0 & 0 & 0 \\ 0 & 1 & 0 & 1 & 0 & 1 & 0 & 1 \\ 0 & 0 & 1 & 1 & 0 & 0 & 1 & 1 \\ 0 & 1 & 1 & 0 & 0 & 1 & 1 & 0 \\ 0 & 0 & 0 & 0 & 1 & 1 & 1 & 1 \\ 0 & 1 & 0 & 1 & 1 & 0 & 1 & 0 \\ 0 & 0 & 1 & 1 & 1 & 1 & 0 & 0 \\ 0 & 1 & 1 & 0 & 1 & 0 & 0 & 1 \end{bmatrix} = \begin{bmatrix} \mathbf{H}_2 & \mathbf{H}_2 \\ \mathbf{H}_2 & \overline{\mathbf{H}_2} \end{bmatrix} \tag{3.8}$$

In general, we can construct a set $\mathbf{H_k}$ of dimension $2^k$ X $2^k$ for a k-bit data set from the $\mathbf{H_{k-1}}$ matrix as follows:

$$\mathbf{H}_k = \begin{bmatrix} \mathbf{H}_{k-1} & \mathbf{H}_{k-1} \\ \mathbf{H}_{k-1} & \overline{\mathbf{H}_{k-1}} \end{bmatrix} \tag{3.9}$$

Where each k bit symbol is represented by one of $2^k$ chip W-H functions. Each pair of symbols, or rows, in each set $\mathbf{H_1}$, $\mathbf{H_2}$, $\mathbf{H_3}$, $\mathbf{H_4}$, ... $\mathbf{H_k}$, ..., has as many digit agreements as disagreements. Each row is different from any other row in exactly $2^k$ /2 locations. One row has all zeros and all others have $2^k$ /2 zeros and $2^k$ /2 ones. The minimum distance is $2^k$ /2. Sometime the elements of the W-H matrix are denoted by +1 and -1 versus 0 and 1. Then the rows of the matrix are mutually orthogonal:[9][10]

$$[h_i]\,[h_j]^T = [0] \tag{3.10}$$

where $[h_i]$ represents one row vector of the W-H matrix and $[h_j]^T$ represents the transpose of another row vector in the same matrix. An alternative method of expressing the orthogonal relationship is

$$\int_0^{T_S} h_i(t)\, h_j(t)\, dt = 0 \tag{3.11}$$

where $T_S$ is the bit period, $h_i(t)$ represents a W-H function from row i, and $h_j(t)$ represents a W-H function from row j. The cross correlation of any row with any other row in the same W-H matrix is zero.

We use the 16 rows of the W-H matrix $\mathbf{H}_4$ shown in Figure 3.6 to represent up to 16 forward channels. Note that each row with exception of the first row has exactly $2^4/2 = 8$ zeros and $2^4/2 = 8$ ones, making each row different from all others in exactly $2^4/2 = 8$ locations.

$$\mathbf{H}_4 = \begin{bmatrix}
0&0&0&0&0&0&0&0&0&0&0&0&0&0&0&0\\
0&1&0&1&0&1&0&1&0&1&0&1&0&1&0&1\\
0&0&1&1&0&0&1&1&0&0&1&1&0&0&1&1\\
0&1&1&0&0&1&1&0&0&1&1&0&0&1&1&0\\
0&0&0&0&1&1&1&1&0&0&0&0&1&1&1&1\\
0&1&0&1&1&0&1&0&0&1&0&1&1&0&1&0\\
0&0&1&1&1&1&0&0&0&0&1&1&1&1&0&0\\
0&1&1&0&1&0&0&1&0&1&1&0&1&0&0&1\\
0&0&0&0&0&0&0&0&1&1&1&1&1&1&1&1\\
0&1&0&1&0&1&0&1&1&0&1&0&1&0&1&0\\
0&0&1&1&0&0&1&1&1&1&0&0&1&1&0&0\\
0&1&1&0&0&1&1&0&1&0&0&1&1&0&0&1\\
0&0&0&0&1&1&1&1&1&1&1&1&0&0&0&0\\
0&1&0&1&1&0&1&0&1&0&1&0&0&1&0&1\\
0&0&1&1&1&1&0&0&1&1&0&0&0&0&1&1\\
0&1&1&0&1&0&0&1&1&0&0&1&0&1&1&0
\end{bmatrix}$$

Figure 3.6 Walsh-Hadamard Functions

### 10. Short PN Code

After orthogonal spreading, a shorter PN sequence of length $L = 2^{15} - 1 = 32767$ chips is added to the data stream in the same manner as the long code. Unlike the long code, the short PN code scrambles

the input data in exactly the same way (same code) for each user occupying the same cell. Users in other cells communicating with a different base station use a different short PN code. Thus, the short code prevents interference among neighboring cells[3]. For a total of up to k cells, the addition of the short PN code results in $d_i' + h_j + c_k$ in Figure 3.1.

The short code length $L = 2^{15} - 1$ is much shorter than the long code length $L = 2^{42} - 1$ to facilitate rapid acquisition of the pilot tone, which is spread only by the short code. This allows mobile subscribers to synchronize with the nearest base station and establish initial call setup without clocking through $2^{42} - 1$ chips first. For BPSK modulation, the short PN sequence is based on the following polynomial:[8]

$$P(x) = x^{15} + x^{18} + x^9 + x^8 + x^7 + 1 \tag{3.12}$$

For quadrature modulation two independent short PN sequences based on the following polynomials are required for the in-phase (I) and quadrature (Q) channels as shown in Figures 3.7 and 3.8:[8]

$$P_I(x) = x^{15} + x^{18} + x^9 + x^8 + x^7 + 1 \tag{3.13}$$

$$P_Q(x) = x^{15} + x^{12} + x^{11} + x^{10} + x^6 + x^5 + x^4 + x^3 + 1 \tag{3.14}$$

The 2.048 Mcps chip rate is the same as the W-H function. The chips are synchronized with the long PN code and the W-H functions.

### 11. Modulation

Either binary or quadrature phase modulation is used to map the data sequence onto the channel. Coherent detection is used with the phase reference provided by the pilot tone. These types of phase modulation are chosen because they are straightforward to implement, less sensitive to noise than amplitude modulation, and provide improved spectral efficiency as compared to comparable frequency modulation schemes. Coherent detection requires added complexity for phase acquisition and tracking but provides improved bit error rates for the same SNR

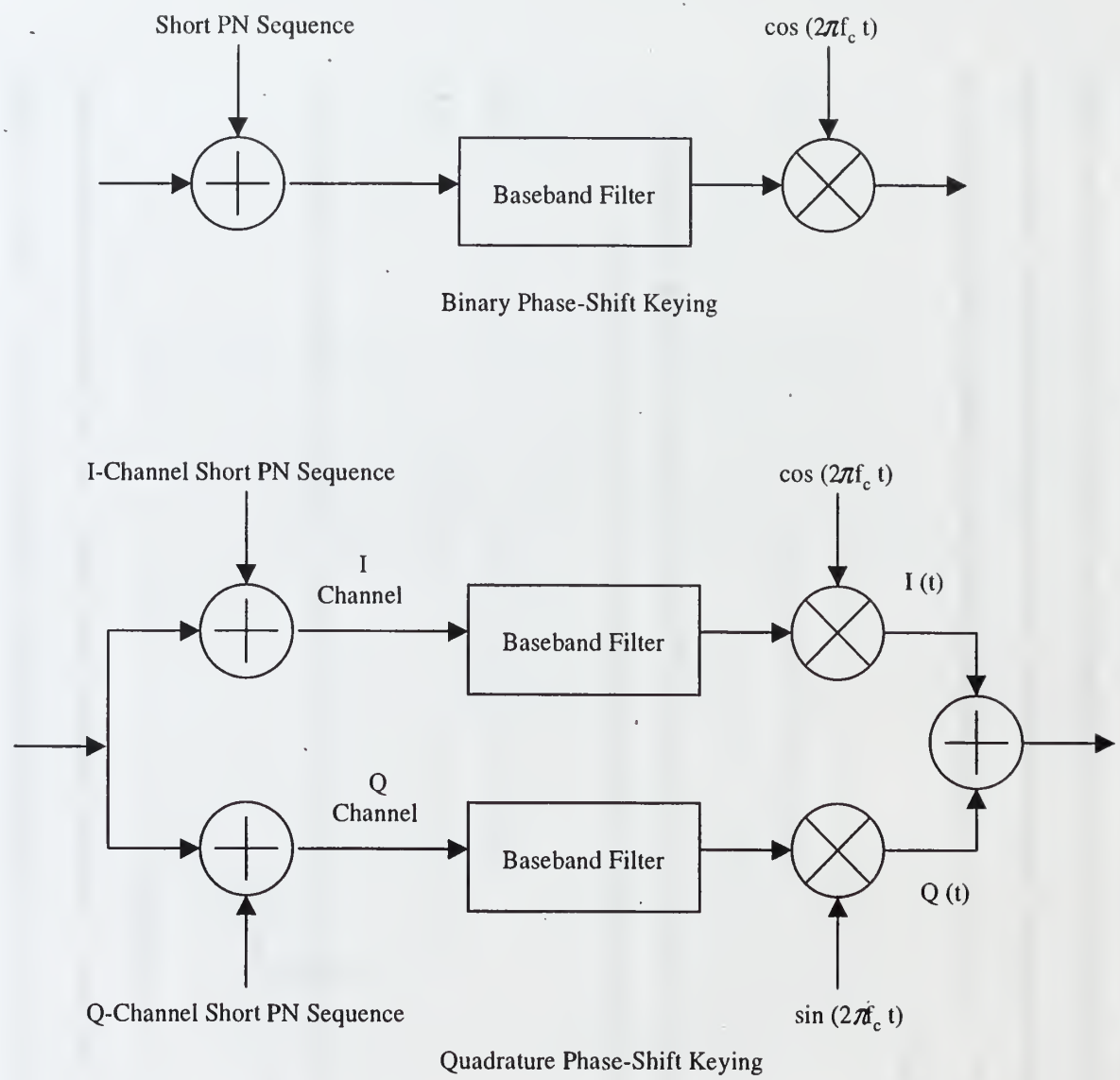


Figure 3.7 Binary and Quadrature Phase-Shift Keying Modulation

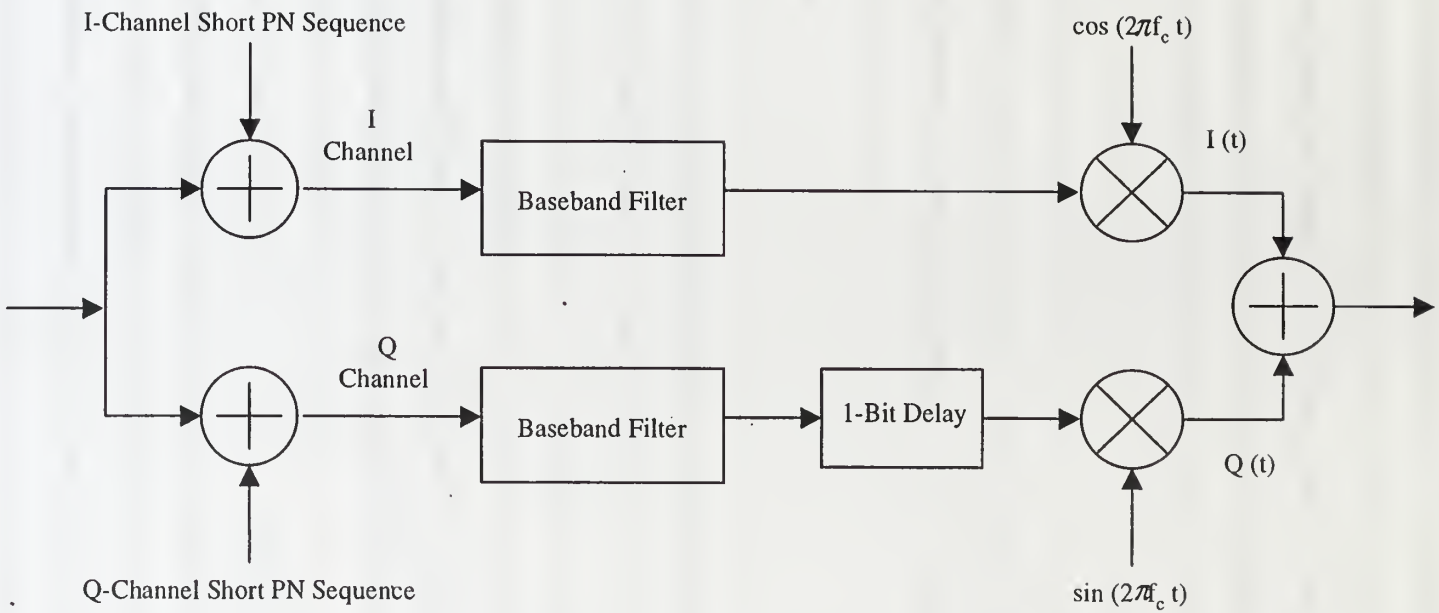


Figure 3.8 Offset Quadrature Phase-Shift Keying Modulation

Binary, quadrature, or offset quadrature phase shift keying may be used. Binary phase shift keying (BPSK) has the advantage of simplicity. A modification of QPSK called Offset QPSK (OQPSK) minimizes spectral broadening due to signal sidelobes caused in part by the $180^0$ phase shift during some transitions. OQPSK is easily implemented by adding a one-bit delay to part of the QPSK circuit to limit phase shift transitions to $90^0$. Circuit diagrams for implementation of each of the modulation schemes is shown in Figure 3.7. Note that both versions of QPSK require two independent short PN codes versus one for BPSK.

#### 12. Power Combining

The 90 separate modulated channels from 6 subcarriers are combined to allow power amplification with one wideband amplifier (versus 6 narrowband amplifiers) immediately prior to transmission.

## B. PILOT CHANNEL

The pilot channel is transmitted at all times by the base station via channel zero of each subcarrier. The pilot is a spread spectrum signal without user data modulation, as shown in Figure 3.2. It is used for subcarrier synchronization by a mobile station operating within the coverage area of the base station and provides the phase reference for coherent detection. The pilot serves as a beacon for mobile subscribers to lock onto for rapid synchronization and initial call setup. The short length of the PN code facilitates rapid synchronization. The pilot channel is spread with W-H function zero prior to transmission. [8]

## C. SYNCHRONIZATION CHANNEL

The synchronization (sync) channel is an encoded, interleaved, spread, and modulated spread spectrum signal that is used by mobile stations operating within the coverage area of the base station to acquire initial time synchronization. The sync channel is spread by the same short PN sequence as the pilot channel and the frame and interleaver timing on the sync channel are aligned with the pilot PN sequence. Therefore, once the mobile station achieves pilot PN sequence synchronization by acquiring the pilot channnel, the synchronization for the sync channel is immediately known. The sync channel is

convolutionally encoded and undergoes symbol repetition as necessary to achieve a constant 128 kbps. The signal is then interleaved, orthogonally spread by W-H function 16, added to the short PN code, modulated, and transmitted over the channel as shown in Figure 3.2. The maximum input data rate is 64 kbps. Subcarrier and channel demultiplexing are not required.[3]

The sync channel is divided into 90 ms superframes, each of which consists of three 30 ms frames. The first bit of each frame is a Start of Message (SOM) bit, and the remaining bits in the frame comprise the sync channel frame body. A sync channel message is composed of a sync channel message and padding. A sync channel message consists of a length field, a message body, and a CRC field. The base station shall set the SOM bit immediately preceding the beginning of a sync channel message capsule to a '1' and shall set all other SOM bits to '0'. The base station shall transmit the sync channel message in consecutive sync channel frame bodies. The base station shall include sufficient padding bits in each sync channel message capsule to extend it up to the SOM bit at the beginning of the next sync channel superframe. System identification, network identification, protocol revision information, time reference data, and paging channel data rate information may be transmitted via the message field of the sync channel frame. The sync channel is shared among all users on the same subcarrier via an Aloha random access protocol described in Chapter V.

## D. PAGING CHANNEL

The paging channel is used to send control information via channel nine of the subcarrier to mobile stations that have not been assigned a traffic channel. Thus, each of the 12 users that may occupy one subcarrier will establish initial communications with the base station via channel nine of that subcarrier. The paging channel may be used to notify mobile stations operating within the coverage area of base station of an incoming call or to transmit overhead information. The paging channel information is convolutionally encoded, repeated as necessary to achieve a constant 128 kbps, interleaved, scrambled by the long PN code using the paging channel long code mask, orthogonally spread by W-H function nine, added to the short PN code, modulated, and transmitted as shown in Figure 3.2. The paging channel transmits low data rate, narrowband information. The maximum input data rate is 64 kbps. Subcarrier and channel demultiplexing are not required.

The paging channel is also divided into 80 ms time slots. The slots are grouped into cycles of 2048 slots, or 163.84 seconds. A mobile monitors the paging channel using a slot cycle within a length that is a submultiple of the maximum slot cycle length of 2048 slots. Each 80 ms slot is composed of four paging channel frames, each 20 ms in length. A 20 ms long paging channel frame is divided into 10 ms long paging channel half frames. The first bit in the paging channel half frame is an capsule indicator bit. A capsule is composed of a paging channel message and padding. The message consists of a length field, message body, and CRC field. The paging channel message field may be used to transmit authentication data, channel assignment, incoming call notification, and other overhead information. The paging channel is shared among all users on the same subcarrier via an Aloha random access protocol described in Chapter V. [3]

# IV. REVERSE CHANNEL CONCEPTUAL DESIGN

## A. OVERVIEW

The reverse channel carries traffic from the mobile subscribers to the base station. There are two possible modes of operation: Mode I for high and very high bit rate applications and Mode II for low and medium bit rate applications. Mode I maximizes bit rate for a few users and has limited flexibility in bandwidth assignment while Mode II provides lower bit rates for a larger numbers of users and allows for more flexibility in bandwidth assignment.

Two modes are required for the reverse channel because of the W-H synchronization problems associated with many different mobiles transmitting at different times. The orthogonal relationship between W-H functions maximizes sharing of bandwidth for each subcarrier. W-H functions must be synchronized to maintain the orthogonal relationship among them that allows multiple users to share the same bandwidth. It is difficult to maintain synchronization among W-H functions transmitted at random times from different mobile subscribers that share the same subcarrier. On the forward channel, synchronization is not a problem because only the base station transmits. The base station can easily transmit all W-H functions sharing the same subcarrier simultaneously so that synchronization and orthogonality are maintained.

In Mode I, the W-H function synchronization issue is addressed by assigning a single mobile all channels of a subcarrier. The mobile has complete control over the transmission time of all W-H functions within the subcarrier(s) it has been assigned. Thus, the mobile can synchronize transmission of W-H functions among all the channels in its subcarrier(s) to maintain orthogonality between channels. However, since each user must be assigned an entire subcarrier, the maximum number of users that can be supported at one time is limited to the total number of subcarriers (six). Valuable bandwidth is wasted for low and medium data rate applications that do not require all channels of a subcarrier. Although use of W-H functions maximizes the capacity of each subcarrier, the W-H function synchronization requirement limits the total number of simultaneous users in the system to six in Mode I.

In Mode II, PN codes are used instead of W-H functions. The use of PN codes allows different mobile suscribers who may transmit at randomly different times to share the same subcarrier, thus avoiding the synchronization issue. Although it may be possible to synchronize transmission times among multiple

mobile subscribers, the overhead required for coordination is excessive for low or medium data rate applications. An unacceptable fraction of the available bandwidth is required to perform transmission coordination functions. The channels of a subcarrier may be assigned to different users in Mode II versus allocating an entire subcarrier to one user as in Mode I. This allows the bandwidth to be allocated more efficiently among low or medium data rate applications that do not require an entire subcarrier. PN codes do not require precise time synchronization. Because PN codes are not truly orthogonal, fewer users can share the same bandwidth before co-channel interference raises the noise floor to unacceptably high levels. Hence, given a conservative estimate, we assume each subcarrier can support a total of four channels in Mode II versus 16 total channels in Mode I, including overhead channels. Mode I uses one channel each for the pilot tone, synchronization, and paging per subcarrier, leaving 13 user channels. There are a total of 13 user channels per subcarrier X 6 subcarriers = 78 user channels in Mode I. Mode II uses one channel per carrier for synchronization, leaving three channels per subcarrier. One of the six subcarriers also carries the access channel, leaving two user channels on that subcarrier. The access channel is shared among all users on the system in Mode I. Hence, in Mode I five of the six subcarriers have three user channels and one subcarrier has two user channels, for a total of 17 user channels. Therefore, in Mode II overall system capacity is reduced by a factor of 78/17 total user channels = 4.588, but the total number of users the system can support increases by a factor of 17/6 = 2.83. Total capacity is traded for flexibility and the resultant bandwidth efficiency.

If a mobile requests three or more channels in Mode II, it may be assigned an entire subcarrier if one is available since there are only three user channels per subcarrier. The base station will always assign the mobile as many channels as possible on the same subcarrier(s). Once an entire subcarrier is assigned to the same mobile, that mobile switches to Mode I operation to take advantage of the higher available bit rate. For example, if a mobile requests four channels in MDR Mode II operation and one subcarrier is unoccupied, that mobile is assigned the entire subcarrier and switches to Mode I HDR operation. The mobile has requested 4 X 64 kbps = 256 kbps. To satisfy the requested bit rate, the mobile might assign all three channels of an unoccupied subcarrier and one channel on another subcarrier. Since the mobile already occupies the entire bandwidth of one subcarrier, switching to Mode I operation provides 832 kbps vs 192 kbps within the bandwidth that has already been allocated to that user. The fourth channel on the

other subcarrier is no longer required and may be assigned to a different user. Thus, bandwith efficiency is enhanced when four, five, seven, or eight channels are requested because one subcarrier can meet any LDR or MDR request in Mode I.

## B. MODE I

Mode I is intended for high data rate (HDR) and very high data rate (VHDR) applications such as video teleconferencing or downloading of large files from the internet. Each user is assigned all channels of one subcarrier for HDR or all channels of two subcarriers for VHDR, supporting user data rates of up to 832 kbps or 1.664 Mbps per user, respectively, as described below. The maximum of six available carriers limits the number of users. Up to six users can be supported simultaneously if all are operating in HDR mode. A maximum of three users can be supported simultaneously if all are operating in VHDR mode.

The system block diagram shown in Figure 4.1 is the same as for the forward channel illustrated in Figure 3.1. Bit rates are the same as for the forward channel and are described in section A.1. of Chapter III. In Mode I operation, each user is assigned either one or two entire subcarriers. Maximum user bit rate is 64 kbps per channel X 13 user channels per subcarrier X 2 subcarriers per user = 1.664 Mbps per user in VHDR mode. Maximum user bit rate is 64 kbps per channel X 13 user channels per subcarrier X 1 subcarrier per user = 832 kbps per user in HDR mode. By way of contrast, maximum user bit rates for the forward channel can be any multiple of 64 kbps since each user may be assigned any combination of 64 kbps channels. Note that in Mode I the entire system can support a maximum of 6 subcarriers X 960 kbps per subcarrier = 5.76 Mbps including overhead, just as in the forward channel. Bit rates below the basic bit rate of 64 kbps at the input of the channel encoder (denoted $s_i$ in Figure 4.1) are also supported. Reduced basic bit rates of 32, 16, and eight kbps per channel correspond to user bit rates of 416, 208, and 104 kbps respectively, if the user is assigned one subcarrier (HDR mode) and correspond to user bit rates of 832, 416, and 208 kbps, respectively, if the user is assigned two subcarriers (VHDR mode).

As in the forward channel, the convolutional encoder output shown as $d_i$ in Figure 4.1 is twice the basic bit rate, or128 kbps. The convolutional encoder output is 64, 32, and 16 kbps for reduced basic channel bit rates of 32, 16, and eight kbps, respectively. Symbol repetition is performed for reduced basic bit rates to

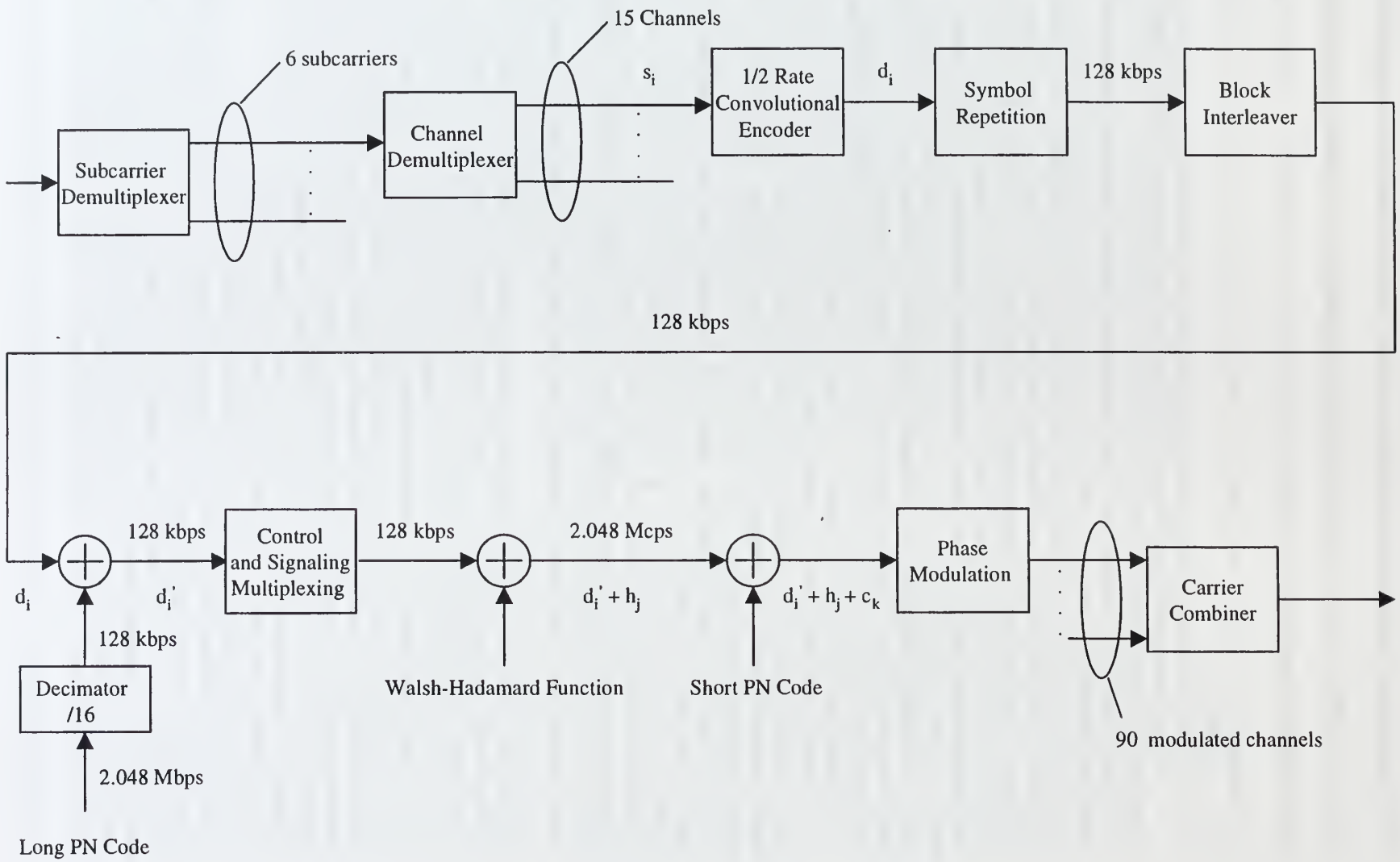


Figure 4.1 Reverse Traffic Channel Mode I

produce a constant bit rate of 128 kbps. Block interleaving is performed as described in the previous chapter. After block interleaving, the 128 kbps signal is scrambled by a decimated long PN code at a chip rate of 128 kcps, or one chip per bit. The output after modulo-2 addition of the decimated long PN code is denoted as $d_i'$ in Figure 4.1 Note that the bit rate remains 128 kbps and that the decimated long PN code simply randomizes the bit stream. After control/signal multiplexing, modulo-2 addition of a W-H function at 2.048 Mcps, or 16 chips per bit, provides for multiple access. The chip rate after addition of the W-H function is 2.048 Mcps. A short PN code is modulo-2 added to the signal at the same chip rate. The short PN code prevents interference from other cells in the system as described in previous sections, but does not affect the chip rate since the short PN code is synchronized with the W-H function. The resulting signal is modulated via quadrature phase-shift keying or binary phase-shift keying prior to carrier combining and transmission.

### 1. Data Channel

#### *a. Subcarrier Demultiplexing*

Carrier demultiplexing is performed in the same manner as the forward channel. Bandwidth is decreased to prevent frequency-selective fading by subdividing the signal into subcarriers. System data rates for the each of the individual subcarriers may be 960, 480,240, or 120 kbps including overhead. A user may be assigned exclusive use of all user channels of one or two subcarriers.

#### *b. Channel Demultiplexing*

Each subcarrier is further subdivided into 15 "channels" via serial-to-parallel converters called channel demultiplexers. Bit rate is reduced by a factor of 15. Output system data rates of the channel demultiplexer may be 128, 64, 32, or 16 kbps per channel. A different W-H code is assigned to each of the 15 channels.

#### *c. Forward Error Correction Coding*

The synchronization channel, access channel, and reverse traffic channel are convolutionally encoded as shown in Figures 4.1 and 4.2. A rate 1/2 code is used as in the forward channel. The output bit rate is twice the input bit rate. The output bit rate is 128 kbps for the 64 kbps basicbit rate. For reduced bit rate inputs of 32, 16, or eight kbps, the output bit rate is 64, 32, or 16 kbps, respectively. Figure 4.3 illustrates the encoding process. The initial state of the encoder is the all zero state. The coded output symbols

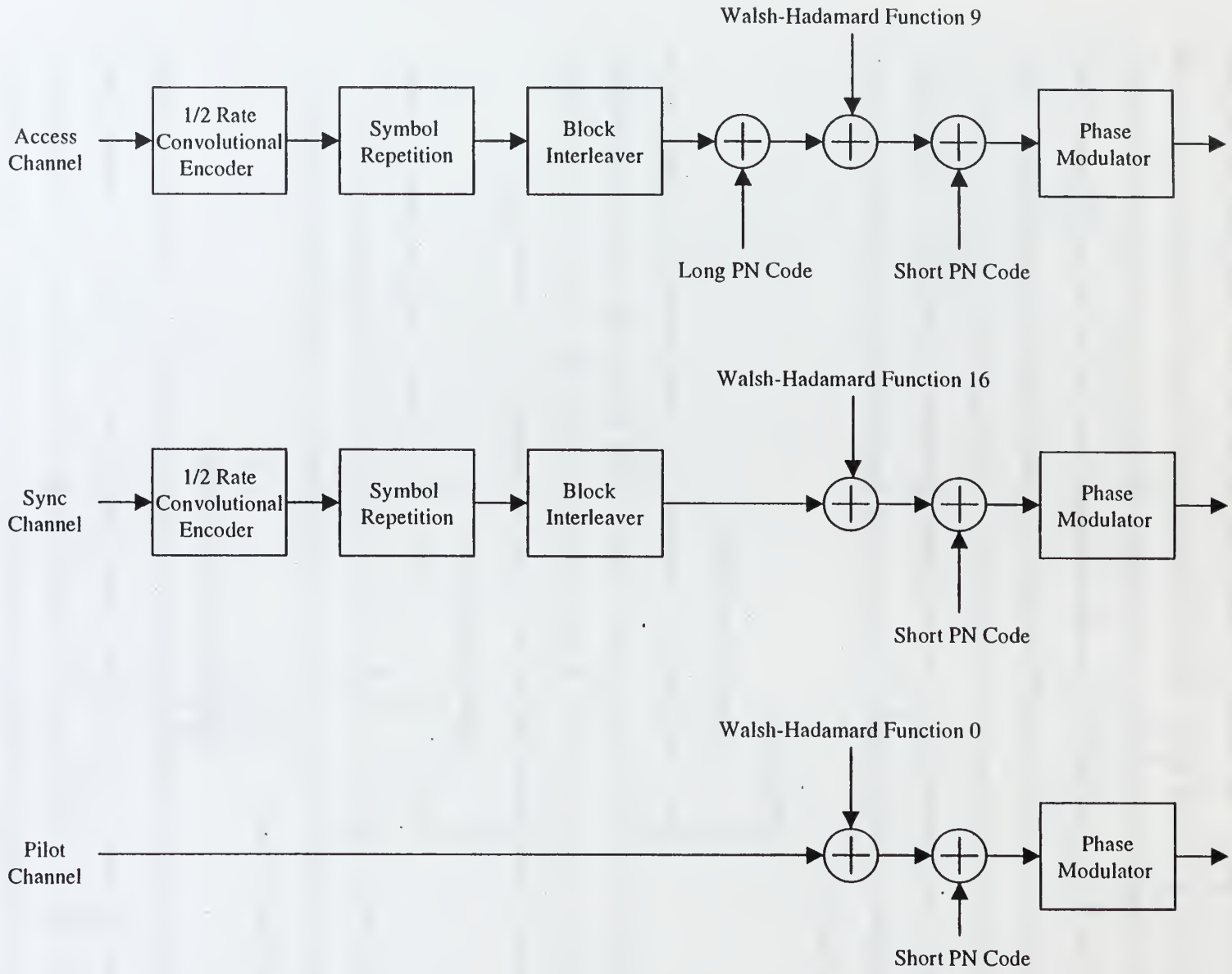


Figure 4.2 Reverse Pilot, Paging, and Synchronization Channels (Mode I)

alternate between $c_0$ and $c_1$ in the output data stream. Symbol $c_0$ is produced from generator function $g_0$, and symbol $c_1$ is produced from generator function $g_1$. The generator functions are $g_0$ = 753 octal = 111101011 and $g_1$ = 561 octal = 011110001. The corresponding polynomials are:[8]

$$P_0(x) = x^8 + x^7 + x^5 + x^3 + x^2 + x + 1 \tag{4.1}$$

$$P_1(x) = x^8 + x^4 + x^3 + x^2 + 1 \tag{4.2}$$

*d. Symbol Repetition*

Symbol repetition is provided if the data rate out of the convolutional encoder is less than the maximum of 128 kbps. Encoder output symbols are repeated as necessary to produce a constant 128 kbps input to the block interleaver. Signals with data rates of 64, 32, or 16 kbps at the encoder output have their symbols repeated two, four, and eight times, respectively.

*e. Interleaving*

All symbols on the synchronization channel, access channel, and forward traffic channel are block interleaved after repetition. The reverse channel uses the same 58 X 58 bit array as the forward channel, as shown in Figures 4.4 and 4.5 and described in detail in Chapter III, section A.5. The bit rate remains 128 kbps.

*f. Data Scrambling*

For Mode I operation, data scrambling is performed identically to the forward channel. A PN code unique to each user is used to scramble the data stream from the block interleaver on the paging and traffic forward channels. Data scrambling consists of randomization of the bit stream to enhance security and privacy. The 2.048 Mcps PN sequence is applied to a decimator which keeps only the first chip out of every sixteen consecutive chips. The symbol rate from the decimator output is 128 kcps. Data

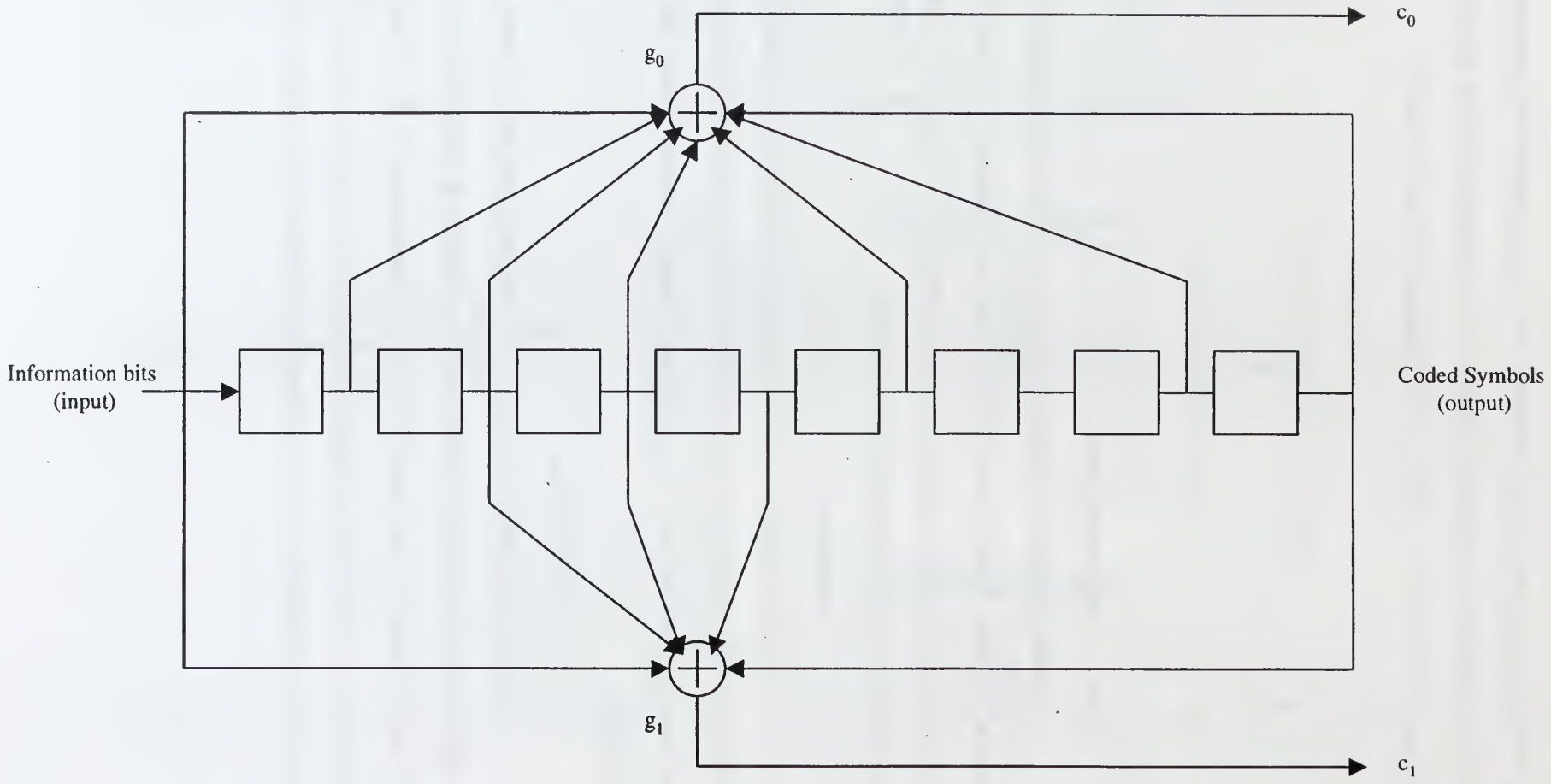


Figure 4.3 Rate 1/2, Constraint Length 9 Convolutional Encoder

| | | |

| | | |

scrambling is by modulo-2 addition of the interleaver output with the decimator output, scrambling the data in a manner unique to that PN code. The resulting randomized output is denoted $d_i'$ in Figure 4.1. Note that adding the PN code scrambles the data but does not spread the signal because the chip rate of the decimator output is 128 kcps, or one chip per bit. The bit rate remains unchanged at 128 kbps. The long PN code chips are synchronized with the W-H chips and the short PN code chips. The decimator allows all three codes to use the same chip rate, simplifying synchronization between them.

The PN sequence uniquely assigned to each user in our system is a code with period $L = 2^{42}-1$ chips. The long code is specified by the same characteristic polynomial used in the IS-95 standard and requires a 42 stage shift register to generate [8][10]:

$$P(x) = x^{42} + x^{35} + x^{33} + x^{31} + x^{27} + x^{26} + x^{22} + x^{21} + x^{19} + x^{18} + x^{17} + x^{16} + x^{10} + x^{7} + x^{6} + x^{5} + x^{3} + x^{2} + x^{1} + 1 \quad (4.3)$$

Each PN chip of the long code is generated by the modulo-2 inner product of a 42-bit mask and the 42-bit state vector of the sequence generator described above. Two types of masks are used: a public mask and a private mask. There are separate public masks for the paging and data channels. All calls are initiated on the paging channel using the paging channel public mask. After a data channel is assigned, the public long code mask is used for authentication. The public long code mask consists of a permutation of the mobile station's electronic serial number (ESN). Transition to the private mask is carried out after authentication is performed. The private mask is a permutation of the mobile station identification number (MIN). [3][8]

#### *g. Control and Signaling Multiplexing*

Control and signaling information is transmitted over the reverse channel in addition to user data. Control messages may be used for link maintenance functions such as power control or handoff instructions or may provide additional user features to be added in the future.

#### *h. Orthogonal Spreading*

Each channel transmitted on the reverse CDMA channel in Mode I is spread with a Walsh-Hadamard (W-H) function at a chip rate of 2.048 Mcps to provide orthogonal channelization among all channels. Each data bit is added to one of the W-H functions of Figure 4.6 consisting of 16 bits

each, spreading the signal bandwidth by a factor of 16. The output after the addition of the W-H function is denoted as $d_i' + h_j$ in Figure 4.1, where $h_j$ is one of 16 possible 16 chip W-H functions and j=1,2,...,16. The output chip rate is 2.048 Mcps. There are 16 chips per bit. Note that the W-H function has the same chip rate as the short PN code. The long PN code, W-H function, and short PN code chips are synchronized with one another. The W-H chips are synchronized with the long PN code and short PN code chips.

A channel that is spread using W-H function n shall be assigned to channel number n, where n corresponds to one of the 16 rows of the W-H matrix numbered 0-15. Channel number zero is always assigned to the pilot tone. Channel nine is assigned to the access channel. Channel 16 is assigned to the synchronization channel. The other 13 channels are assigned user traffic. The 16 X 16 W-H matrix $\mathbf{H_4}$ is constructed via the procedure outlined in Chapter III section A.8. The 16 rows of the W-H matrix $\mathbf{H_4}$ represent up to 16 reverse channels:

$$\mathbf{H}_4 = \begin{bmatrix}
0&0&0&0&0&0&0&0&0&0&0&0&0&0&0&0\\
0&1&0&1&0&1&0&1&0&1&0&1&0&1&0&1\\
0&0&1&1&0&0&1&1&0&0&1&1&0&0&1&1\\
0&1&1&0&0&1&1&0&0&1&1&0&0&1&1&0\\
0&0&0&0&1&1&1&1&0&0&0&0&1&1&1&1\\
0&1&0&1&1&0&1&0&0&1&0&1&1&0&1&0\\
0&0&1&1&1&1&0&0&0&0&1&1&1&1&0&0\\
0&1&1&0&1&0&0&1&0&1&1&0&1&0&0&1\\
0&0&0&0&0&0&0&0&1&1&1&1&1&1&1&1\\
0&1&0&1&0&1&0&1&1&0&1&0&1&0&1&0\\
0&0&1&1&0&0&1&1&1&1&0&0&1&1&0&0\\
0&1&1&0&0&1&1&0&1&0&0&1&1&0&0&1\\
0&0&0&0&1&1&1&1&1&1&1&1&0&0&0&0\\
0&1&0&1&1&0&1&0&1&0&1&0&0&1&0&1\\
0&0&1&1&1&1&0&0&1&1&0&0&0&0&1&1\\
0&1&1&0&1&0&0&1&1&0&0&1&0&1&1&0
\end{bmatrix}$$

Figure 4.6 Walsh-Hadamard Functions

*i. Short PN Code*

After orthogonal spreading, a shorter PN sequence of length $L = 2^{15} - 1 = 32767$ chips is added to the data stream in the same manner as the long code. Unlike the long code, the short PN code scrambles the input data in exactly the same way (same code) for each user occupying the same cell. Users in other cells communicating with a different base station use a different short PN code. Thus, the short code prevents interference among neighboring cells [8]. For a total of up to k cells, the addition of the short PN code results in $d_i' + h_j + c_k$ in Figure 4.1.

The short code length $L = 2^{15} - 1$ is much shorter than the long code length $L = 2^{42} - 1$ to facilitate rapid acquisition of the pilot tone, which is spread only by the short code. This allows mobile subscribers to synchronize with the nearest base station and establish initial call setup without clocking through $2^{42} - 1$ chips first. For BPSK modulation, the short PN sequence is based on the following polynomial:[8]

$$P(x) = x^{15} + x^{18} + x^{9} + x^{8} + x^{7} + 1 \tag{4.4}$$

For quadrature modulation, two independent short PN sequences based on the following polynomials are required for the in-phase (I) and quadrature (Q) channels as shown in Figures 4.7 and 4.8:[8]

$$P_I(x) = x^{15} + x^{18} + x^{9} + x^{8} + x^{7} + 1 \tag{4.5}$$

$$P_Q(x) = x^{15} + x^{12} + x^{11} + x^{10} + x^{6} + x^{5} + x^{4} + x^{3} + 1 \tag{4.6}$$

The 2.048 Mcps chip rate is the same as the W-H function. The chips are synchronized with the long PN code and the W-H functions.

*j. Modulation*

Either binary or quadrature phase modulation is used to map the data sequence onto the channel for Mode I operation, just as with the forward channel. Coherent detection is used with the phase reference provided by the pilot tone. These types of phase modulation are chosen because they are straightforward to implement, less sensitive to noise than noncoherent frequency modulation, and provide

improved spectral efficiency as compared to comparable frequency modulation schemes. Coherent detection requires added complexity for phase acquisition and tracking but provides improved bit error rates for the same SNR.

Binary, quadrature, or offset quadrature phase-shift keying may be used. Binary phase-shift keying (BPSK) has the advantage of simplicity. A modification of QPSK called Offset QPSK (OQPSK) minimizes spectral broadening due to signal sidelobes caused in part by the $180^0$ phase shift during some transitions. OQPSK is easily implemented by adding a one-bit delay to the quadrature (Q) channel of the QPSK circuit to limit phase shift transitions to $90^0$. Circuit diagrams for implementation of each of the modulation schemes are shown in Figures 4.7 and 4.8. Note that both versions of QPSK require two independent short PN codes versus one for BPSK.

#### *k. Power Combining*

The 90 separate modulated channels for 6 subcarriers are combined to allow power amplification with one wideband amplifier (versus 6 narrowband amplifiers) immediately prior to transmission.

### 2. Pilot Channel

The pilot channel is a reference channel that the base station uses for acquisition, timing, and as a phase reference for coherent demodulation. The pilot channel is transmitted via channel zero of each reverse channel subcarrier in Mode I. The pilot is a spread spectrum signal without user data modulation as shown in Figure 4.2. The short length of the PN code facilitates rapid synchronization during initial call setup. The pilot is spread with W-H function zero prior to transmission.[3]

### 3. Synchronization Channel

The synchronization (sync) channel is an encoded, interleaved, spread, and modulated spread spectrum signal that is used by the base station to acquire initial time synchronization with a mobile operating in Mode I on the reverse channel. The mobile shall transmit one sync channel for each reverse channel subcarrier in Mode I. The sync channel is spread by the same short PN sequence as the pilot channel and the frame and interleaver timing on the sync channel are aligned with the pilot PN sequence.

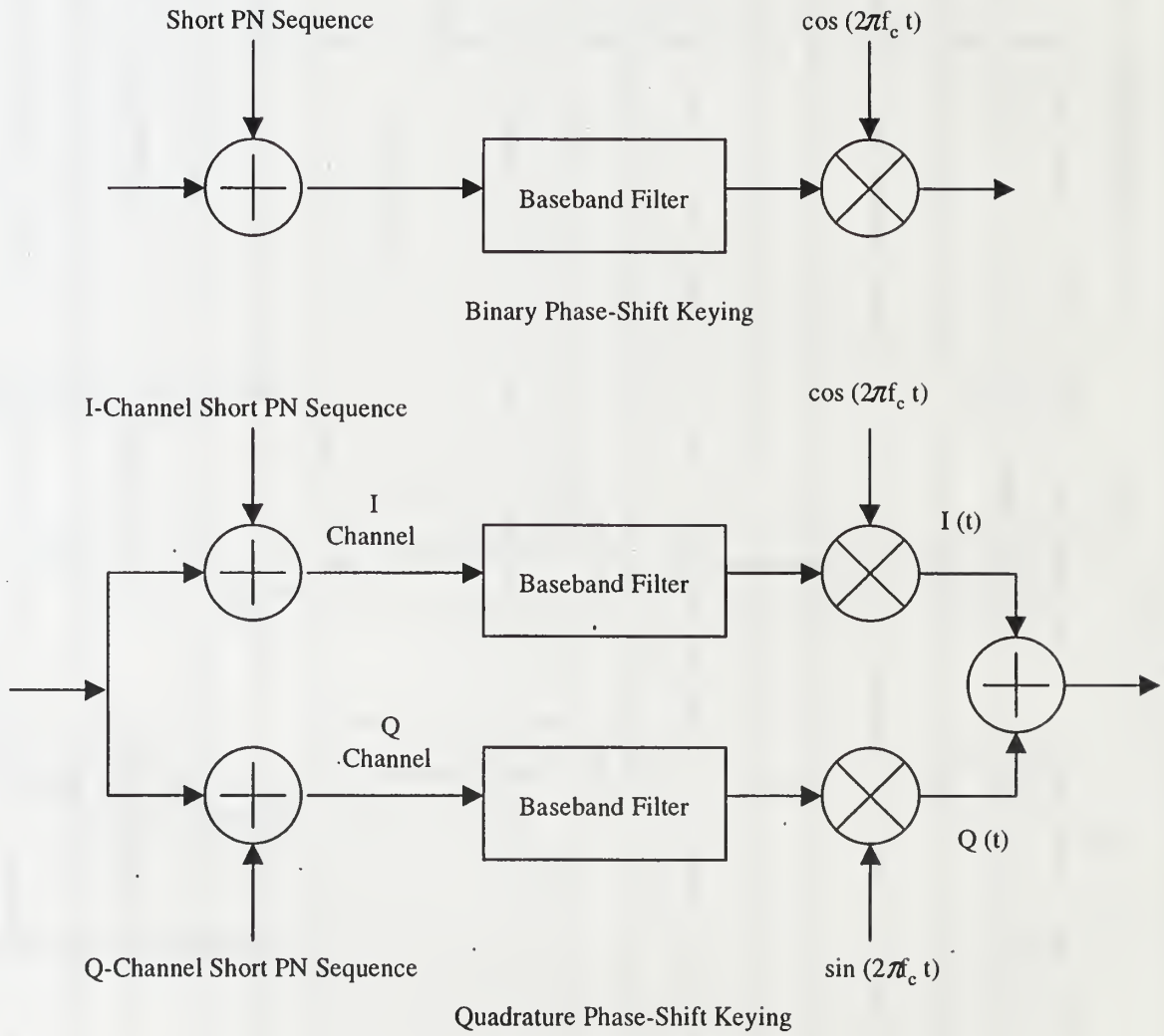


Figure 4.7 Binary and Quadrature Phase-Shift Keying Modulation

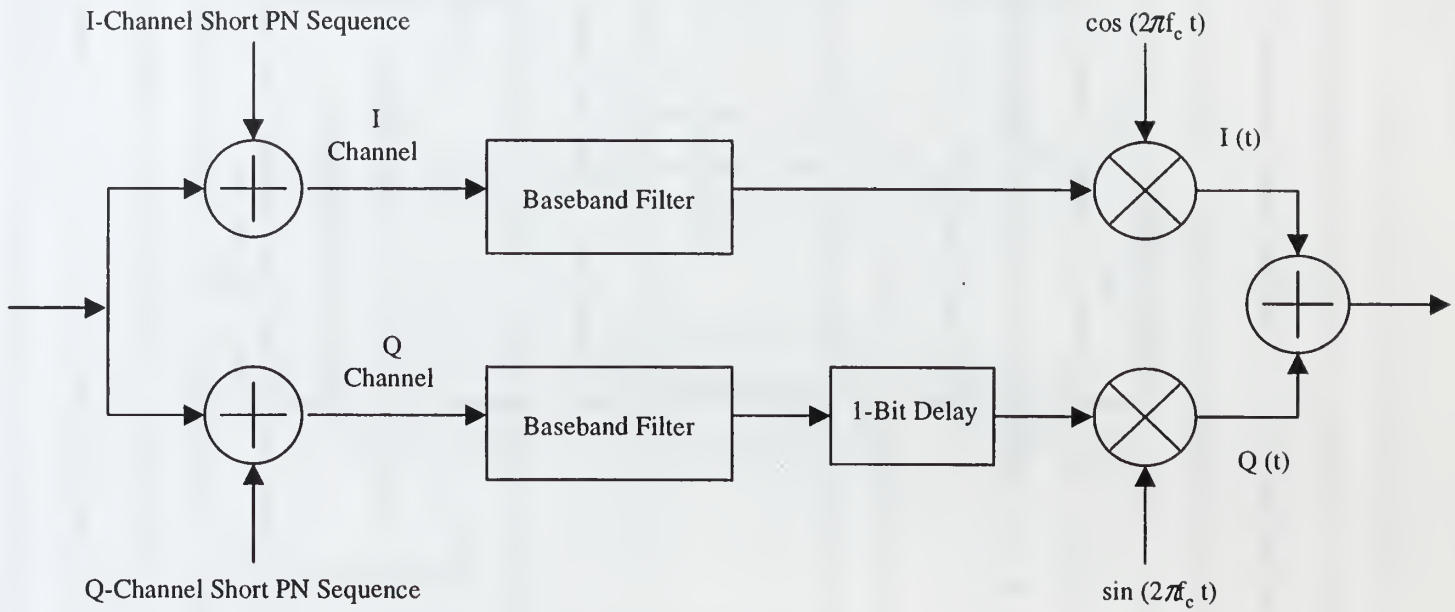


Figure 4.8 Offset Quadrature Phase-Shift Keying Modulation

Once the base station achieves pilot PN sequence synchronization by acquiring the pilot channel, the synchronization for the sync channel is immediately known. The maximum input data rate is 64 kbps. Subcarrier and channel demultiplexing are not required. The sync channel is convolutionally encoded and undergoes symbol repetition as necessary to achieve a constant 128 kbps. The signal is then interleaved, orthogonally spread by W-H function 16, added to the short PN code, modulated, and transmitted over the channel as shown in Figure 4.2.

The sync channel is divided into 80 ms superframes, each of which consists of three 26.667 ms frames. The first bit of each frame is a Start of Message (SOM) bit, and the remaining bits in the frame comprise the sync channel frame body. A sync channel message is composed of a sync channel message and padding. A sync channel message consists of a length field, a message body, and a CRC field. The mobile station shall set the SOM bit immediately preceding the beginning of a sync channel message capsule to a '1' and shall set all other SOM bits to '0'. The mobile station shall transmit the sync channel message in consecutive sync channel frame bodies. The base station shall include sufficient padding bits in each sync channel message capsule to extend it up to the SOM bit at the beginning of the next sync channel superframe. System identification, network identification, protocol revision information, time reference data, and access channel data rate information may be transmitted via the message field of the sync channel frame.[3]

#### 4. Access Channel

The access channel is used by a mobile station to initiate communications with the base station and to respond to paging channel messages. The access channel signal is convolutionally coded, repeated as necessary, interleaved, scrambled by a long PN code, spread by W-H code 9, spread by a short PN code, modulated, and transmitted as shown in Figure 4.2. Thus, the subcarrier user establishes initial communications with the base station via channel nine of that subcarrier. The access channel transmits low data rate, narrowband information. The maximum input data rate is 64 kbps. Subcarrier and channel demultiplexing are not required.

The access channel uses a different public long code mask than the reverse data channel. The access channel public long code mask contains base station identification and associated paging channel information instead of the authentication information found in the traffic channel mask.

The access channel is also divided into 80 ms time slots. The slots are grouped into cycles of 2048 slots, or 163.84 seconds. A base station monitors the access channel using a slot cycle within a length that is a submultiple of the maximum slot cycle length of 2048 slots. Each 80 ms slot is composed of four access channel frames, each 20 ms in length. A 20 ms long access channel frame is divided into 10 ms long access channel half frames. The first bit in the access channel half frame is a capsule indicator bit. A capsule is composed of an access channel message and padding. The message consists of a length field, message body, and CRC field.[3]

## C. MODE II

### 1. Overview

Mode II is intended for low data rate (LDR) and medium data rate (MDR) applications such as voice, paging, and small file transfer. Each user is assigned up to three 64 kbps channels for LDR or up to eight 64 kbps channels for MDR applications in Mode II operation versus one or two entire subcarriers for Mode I operation. Bandwidth is allocated in smaller increments to minimize wasted bandwidth for low to medium data rate applications. Channels may be assigned from one subcarrier or from any combination of different subcarriers, resulting in significantly improved flexibility compared to Mode I operation. If an entire subcarrier is available and three or more channels are requested by an individual mobile, the base station assigns the entire subcarrier to that mobile and the mobile switches to Mode I operation. As described in section A of this chapter, Mode I operation provides a much higher bit rate for the same bandwidth. In fact, switching to Mode I in such cases enhances bandwidth efficiency because one subcarrier is sufficient to meet the requirements of any Mode II request and additional channels need not be assigned. In Mode II, it is difficult to synchronize W-H functions among different mobile users sharing the same subcarrier and transmitting at random times from different locations within the cell. Synchronization is not a problem in Mode I because different users do not share the same subcarrier. Because Mode I supports only high bit rate applications, each user can be assigned an entire subcarrier without wasting bandwidth. For low data rate applications, however, assigning an entire subcarrier to each user results in wasted bandwidth and limits the system to only a few low data rate users at one time. PN codes are used in Mode II instead of W-H codes because they do not require precise synchronization. However, PN codes do

not provide a truly orthogonal relationship among channels. As a result, channels sharing the same subcarrier interfere with one another to a limited degree. Each additional user sharing the same subcarrier increases the co-channel interference experienced by all other users of the same subcarrier. The tradeoff for the added flexibility is a reduction in the total number of channels per subcarrier from 16 to four. Of the four channels on each subcarrier, one is utilized for synchronization, leaving three user channels per subcarrier. One of the subcarriers also provides an access channel, leaving only two user channels on that subcarrier. Hence, there are a total of 17 user channels in Mode II.

Maximum user data rates are 3 channels per user X 64 kbps per channel = 192 kbps per user for LDR applications and 8 channels per user X 64 kbps per channel = 512 kbps per user for MDR operation. Since there are a maximum of only three 64 kbps user channels per subcarrier, each subcarrier supports a maximum of 3 X 64 kbps = 192 kbps in Mode II versus 832 kbps for Mode I. Maximum user bit rate, in Mode I is 17 user channels X 64 kbps per channel = 1.088 Mbps. Maximum system bit rate, including overhead, is 6 subcarriers X 4 total channels per subcarrier X 64 kbps per channel = 1.536 Mbps. A system block diagram for Mode II operation is shown in Figure 4.9. The 64 kbps basic bit rate channel output is denoted as $s_i$.

Mode II supports reduced basic bit rates of 32, 16 and eight kbps versus 64 kbps. Reduced basic bit rates may be used for low data rate applications or for added diversity in severe fading environments. Reduced basic channel bit rates of 32, 16, and eight kbps at the channel demultiplexer output in Figure 4.9 correspond to reduced subcarrier bit rates of 128, 64 and 32 kbps per subcarrier at the channel demultiplexer input, respectively, since there are a total of four channels per subcarrier including overhead in Mode II. The corresponding total system bit rates at the subcarrier demultiplexer input are 768, 384, and 192 kbps since there are six subcarriers in the system.

As in the forward channel and in Mode I operation of the reverse channel, the convolutional encoder output shown as $d_i$ in Figure 4.9 is twice the basic bit rate, or 128 kbps. The convolutional encoder output is 64, 32, and 16 kbps for reduced basic channel bit rates of 32, 16, and eight kbps, respectively. Symbol repetition is performed for reduced basic bit rates to produce a constant bit rate of 128 kbps. Block interleaving is performed as described in previous sections. After block interleaving, the 128 kbps signal is spread by a long PN code at a chip rate of 2.048 Mcps, or 16 chips per bit. The output after modulo-2

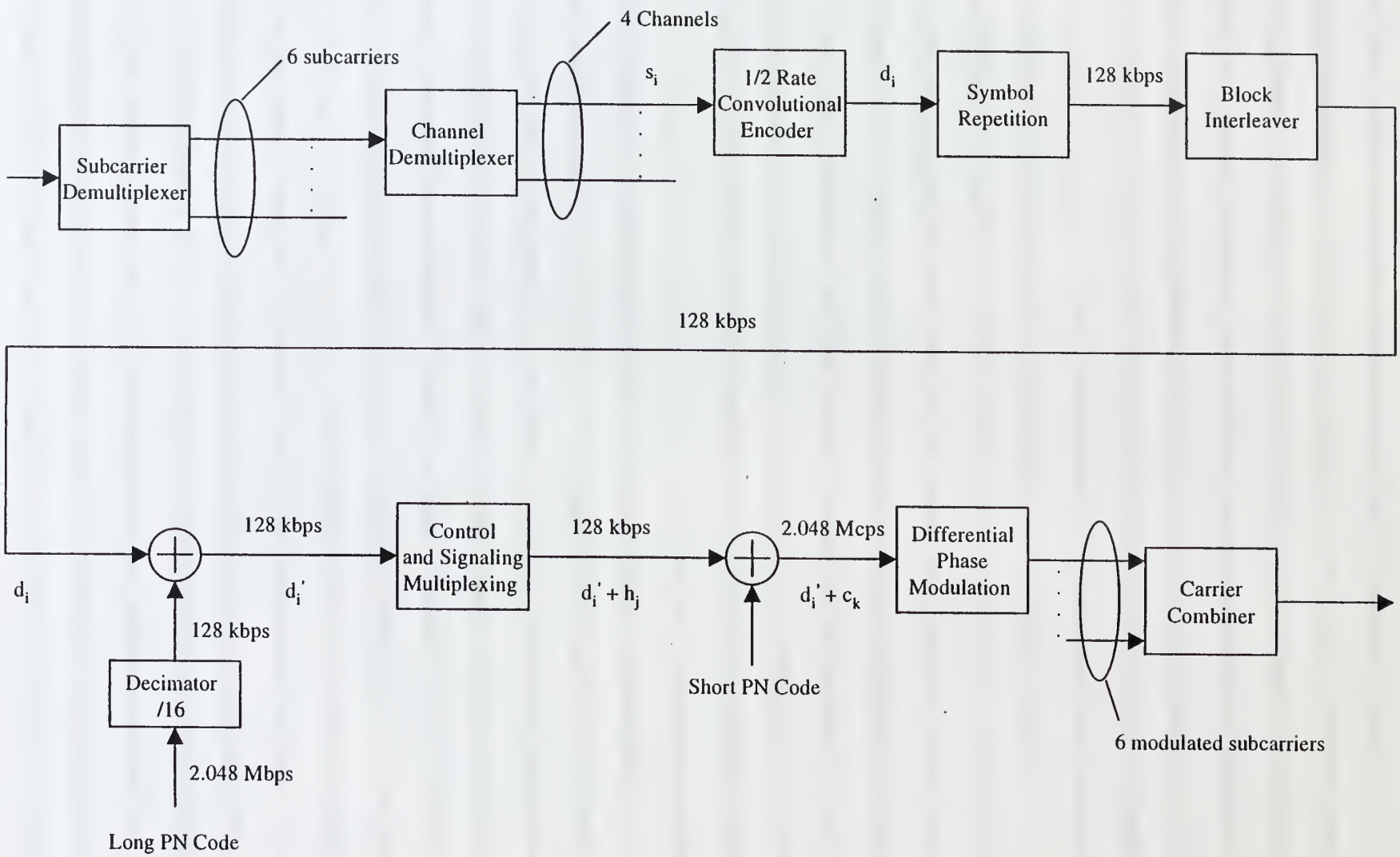


Figure 4.9 Reverse Traffic Channel Mode II

addition of the long PN code is denoted as $d_i'$ in Figure 4.9 Note that the long PN code allows multiple users to share the same channel in addition to randomizing the bit stream. In the forward channel and in Mode I operation of the reverse channel, the long PN code is used only for randomization and the W-H functions provide for multiple access. In Mode II operation, the long PN code performs the randomization function, the short PN code provides multiple access, and there are no W-H functions. After control and signal multiplexing, a short PN code is modulo-2 added to the signal at the same chip rate. The short PN code prevents interference from other cells in the system as described in previous sections as well as other users on the same subcarrier. Differential phase-shift keying modulation is used in Mode II instead of binary or quadrature phase-shift keying modulation to allow for noncoherent detection and to reduce complexity.

### 2. Data Channel

#### *a. Subcarrier Demultiplexing*

Subcarrier demultiplexing is performed in the same manner as the forward channel and reverse channel Mode I. Bandwidth is decreased to prevent frequency-selective fading by subdividing the signal into subcarriers. System bit rates for the each of the six individual subcarriers, including overhead, may be 256, 128, 64, or 32 kbps. Corresponding maximum user bit rates per subcarrier are 192, 96, 48, and 24 kbps, respectively.

#### b. Channel Demultiplexing

Each subcarrier is further subdivided into four "channels" via serial-to-parallel converters. The output data rate of the channel demultiplexer may be 64, 32, 16, or 8 kbps. Because in Mode II operation short PN codes are used for signal spreading instead of orthogonal W-H codes, only three subscribers can share a subcarrier at one time in addition to overhead channels. Cross correlation between individual PN codes results in increased co-channel interference, limiting the number of users who may occupy the subcarrier to three at one time. The lower data rate applications supported by Mode II operation do not require the added complexity of W-H spreading, pilot tones, and coherent detection used in Mode I. Mode II provides more flexibility and simpler implementation at the expense of lower data rate.

*c. Forward Error Correction Coding*

The synchronization channel, access channel, and reverse traffic channel are convolutionally encoded for Mode II operation as shown in Figures 4.9 and 4.10. A rate 1/2 code is used as in the forward channel and reverse channel Mode I and described in section B.1.c of this chapter.

*c. Symbol Repetition*

Symbol repetition is provided if the data rate out of the convolutional encoder is less than the maximum of 128 kbps. Encoder output symbols are repeated as necessary to produce a constant 128 kbps input to the block interleaver. Signals with data rates of 64, 32, or 16 kbps at the encoder output have their symbols repeated two, four, and eight times, respectively.

*e. Interleaving*

All symbols on the synchronization channel, access channel, and reverse traffic channel are block interleaved after repetition. The reverse channel Mode II uses the same 58 X 58 bit array as Mode I and the forward channel, as shown in Figures 4.4 and 4.5 and described in detail in section B.1.d of this chapter.

*f. Long PN Code*

For reverse channel Mode II operation, data scrambling is performed identically to the forward channel and Mode I operation on the reverse channel. A PN code unique to each user is used to scramble the data stream from the block interleaver on the paging and traffic forward channels. Data scrambling consists of randomization of the bit stream to enhance security and privacy. The 2.048 Mcps PN sequence is applied to a decimator which keeps only the first chip out of every sixteen consecutive chips. The symbol rate from the decimator output is 128 kcps. Data scrambling is by modulo-2 addition of the interleaver output with the decimator output, scrambling the data in a manner unique to that PN code. The resulting randomized output is denoted $d_i'$ in Figure 4.1. Note that adding the PN code scrambles the data but does not spread the signal because the chip rate of the decimator output is 128 kcps, or one chip per bit. The bit rate remains unchanged at 128 kbps. The long PN code chips are synchronized with the short PN code chips. The decimator allows all three codes to use the same chip rate, simplifying synchronization between them.

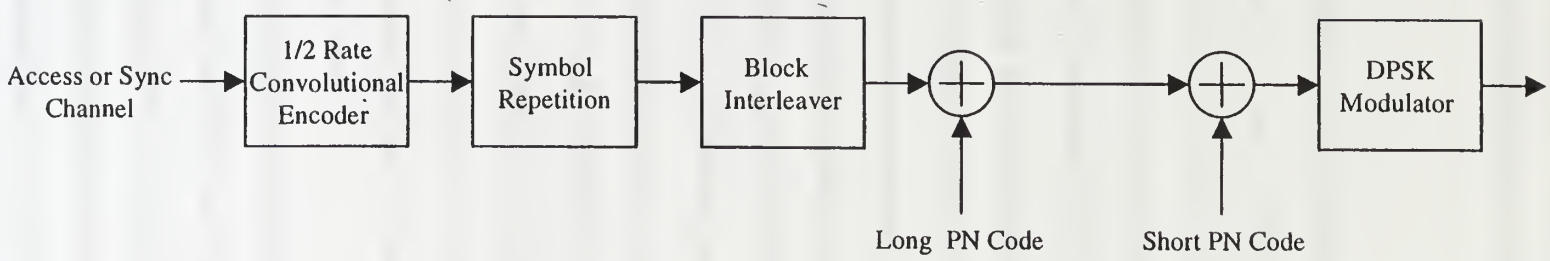


Figure 4.10 Reverse Access and Synchronization Channels (Mode II)

The PN sequence uniquely assigned to each user in our system is a code with period $L = 2^{42}-1$ chips. The long PN code requires a 42-stage shift register to generate and is characterized by the following polynomial [8]:

$$P(x) = x^{42} + x^{35} + x^{33} + x^{31} + x^{27} + x^{26} + x^{22} + x^{21} + x^{19} + x^{18} + x^{17} + x^{16} + x^{10} + x^{7} + x^{6} + x^{5} + x^{3} + x^{2} + x^{1} + 1 \quad (4.7)$$

Each PN chip of the long code is generated by the modulo-2 inner product of a 42-bit mask and the 42-bit state vector of the sequence generator. Two types of masks are used in the long code generator: a public mask for the mobile station's electronic serial number (ESN) and a private mask for the mobile station identification number (MIN). There are two types of public masks: one for the data channel and one for the access channel. The public mask used varies depending on the channel type on which the mobile station is transmitting. All calls are initiated on the access channel using the access channel public mask. It contains fields that indicate the access channel number and base station identification. After a channel is assigned, authentication and call setup is completed using the data channel public mask. Transition to the private mask is carried out after authentication is performed and data transfer is ready to begin. [1][3]

#### *g. Control and Signaling Multiplexing*

Control and signaling information is transmitted over the reverse channel in addition to user data. Control messages may be used for link maintenance functions such as power control or handoff instructions or may provide additional user features to be added in the future.

#### *h. Short PN Code*

After spreading by the long PN code, a shorter PN sequence of length $L = 2^{15} - 1 = 32767$ chips is modulo-2 added to the data stream. Thus, the short code prevents interference among neighboring cells and other users on the same subcarrier. It is assumed that different short PN codes are assigned to users in neighboring cells as well as users sharing the same cell. The chip rate of the short PN code is 2.048 Mcps, or 16 chips per bit. The short PN code performs the spreading and multiple access functions in Mode II, whereas the W-H functions perform the spreading and multiple access functions in

Mode I and on the forward channel. The short PN code allows for shorter acquisition time versus the long PN code. The output after the addition of the short PN code is denoted $d_i'$ in Figure 4.9. The short PN code is synchronized with the long PN code. The short PN sequence is based on the following polynomial:[8]

$$P(x) = x^{15} + x^{13} + x^{9} + x^{8} + x^{7} + 1 \tag{4.8}$$

Note that only one short PN code polynomial is required for differential phase-shift keying modulation.

*i. Modulation*

Differential phase-shift keying (DPSK) is used to map the data sequence onto the channel. The use of DPSK allows for noncoherent detection, eliminating the need for phase synchronization with the receiver. Therefore, no pilot tone is required for phase reference in Mode II. A synchronization channel is still required for time synchronization of the signal. Noncoherent receivers are inexpensive and easy to build. The modulator essentially consists of a differential encoder and phase-shift keying modulator as shown in Figure 4.11. The tradeoff for reduced complexity is reduced energy efficiency of about 3 dB relative to BPSK and QPSK.

*j. Power Combining*

The 18 separate modulated channels from 6 subcarriers are combined to allow power amplification with one wideband amplifier (versus 6 narrowband amplifiers) immediately prior to transmission.

### 3. Synchronization Channel

The synchronization (sync) channel is a spread spectrum signal that is used by the base station to acquire initial time synchronization with a mobile operating in Mode II on the reverse channel. The mobile shall transmit one sync channel for each subcarrier. The sync channel is shared among all users on that subcarrier via an unslotted Aloha random access protocol described in detail in Chapter V. The sync channel is convolutionally encoded and undergoes symbol repetition as necessary to achieve a constant 128 kbps. The signal is then interleaved, spread by a PN code, added to a different PN code, modulated, and

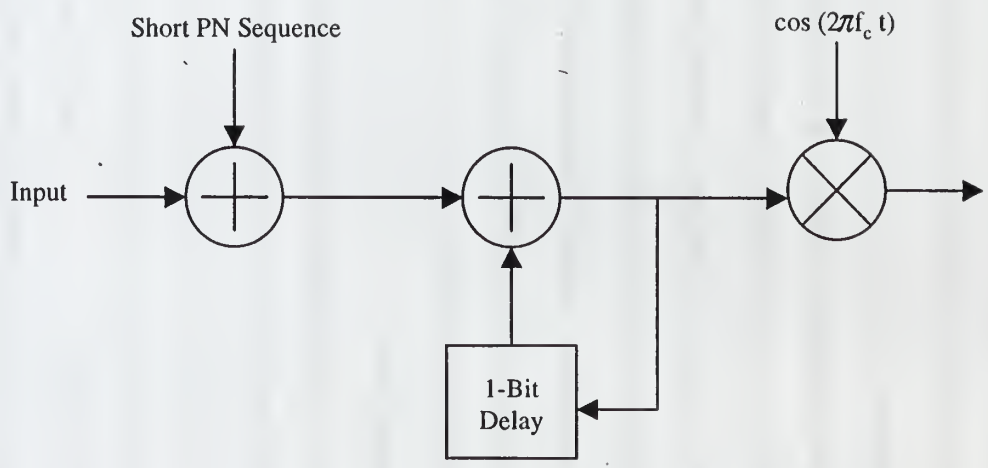


Figure 4.11 Differential Phase Shift Keying Modulation

transmitted over the channel as shown in Figure 4.10. The maximum input data rate is 64 kbps. Subcarrier and channel demultiplexing are not required.

The sync channel is divided into 90 ms superframes, each of which consists of three 30 ms frames. The first bit of each frame is a Start of Message (SOM) bit, and the remaining bits in the frame comprise the sync channel frame body. A sync channel message is composed of a sync channel message and padding. A sync channel message consists of a length field, a message body, and a CRC field. The mobile station shall set the SOM bit immediately preceding the beginning of a sync channel message capsule to a '1' and shall set all other SOM bits to '0'. The mobile station shall transmit the sync channel message in consecutive sync channel frame bodies. The base station shall include sufficient padding bits in each sync channel message capsule to extend it up to the SOM bit at the beginning of the next sync channel superframe. System identification, network identification, protocol revision information, time reference data, and access channel data rate information may be transmitted via the message field of the sync channel frame.[8]

#### 4. Access Channel

The access channel is used by a mobile station to initiate communications with the base station and to respond to paging channel messages. One access channel is shared among all users on the system in Mode I operation. The subcarrier that carries the access channel has only two user channels available. All other subcarriers have three user channels available. The access channel is shared among all users via an unslotted Aloha random access protocol described in detail in Chapter V. The access channel signal is convolutionally coded, repeated as necessary, interleaved, spread by a PN code, added to a different PN code, modulated, and transmitted as shown in Figure 4.10. The mobile shall transmit one access channel per carrier. The multiple users share the same channel via a random access protocol.

The access channel uses a different public long code mask than the reverse data channel. The access channel public long code mask contains base station identification and associated paging channel information instead of the authentication information found in the traffic channel mask. The access channel transmits low data rate, narrowband information. The maximum input data rate is 64 kbps. Subcarrier and channel demultiplexing are not required.

The access channel is also divided into 80 ms time slots. The slots are grouped into cycles of 2048 slots, or 163.84 seconds. A base station monitors the access channel using a slot cycle with a length that is a submultiple of the maximum slot cycle length of 2048 slots. Each 80 ms slot is composed of four access channel frames, each 20 ms in length. A 20 ms long access channel frame is divided into 10 ms long access channel half frames. The first bit in the access channel half frame is an capsule indicator bit. A capsule is composed of a access channel message and padding. The message consists of a length field, message body, and CRC field.[8]

# V. FRAMING CONCEPTUAL DESIGN

## A. OVERVIEW

The basic frame structure is based on the IS-95 standard and scaled appropriately to accommodate higher bit rates. The overall frame lengths are chosen to be roughly equivalent to IS-95 to simplify frame synchronization, and the internal frame structure is tailored to the wideband design presented. A longer CRC commonly used for data transfer applications is chosen in lieu of the one used in the IS-95 standard. The demand assignment and Global Positioning System features discussed in this section are specific to this design.

## B. FORWARD CHANNEL

### 1. Traffic Channel

Forward channel traffic is formatted into 20 ms frames as in the IS-95 standard. The 20 ms frame length results in more bits per frame than in IS-95 due to the higher bit rates of the wideband system. A lower percentage of each frame is devoted to overhead to maximize the use of the allocated bandwidth for user data. Data frames consist of 2560 bits at 128 kbps. The frame is composed of 2520 information bits, 32 frame quality indicator (CRC) bits, and 8 encoder tail bits as shown in Figure 5.1.

The frame quality indicator is calculated on all information bits within the frame via a CRC used widely in data and computer communications applications. The generator polynomial for the frame quality indicator shall be as follows:[10]

$$g(x) = x^{32} + x^{26} + x^{23} + x^{22} + x^{16} + x^{12} + x^{11} + x^{10} + x^{8} + x^{7} + x^{5} + x^{4} + x^{2} + 1 \qquad (5.1)$$

The traffic channel may be used to carry power control/signaling traffic in addition to user information. Data frames should be filled to capacity with user or control data to maximize bandwidth efficiency. Messages that do not fill entire frames and require padding waste bandwidth. Therefore, multiple frame configurations support variable message lengths and multiple combinations of user and power control/signaling traffic.

The first two information bits indicate the control/user data mix in the frame. The frame is dedicated to user data if no control messages are required. Power control/signaling data may be sent instead of user data for the entire frame via blank and burst when user traffic is not active. Power control/signaling data may also

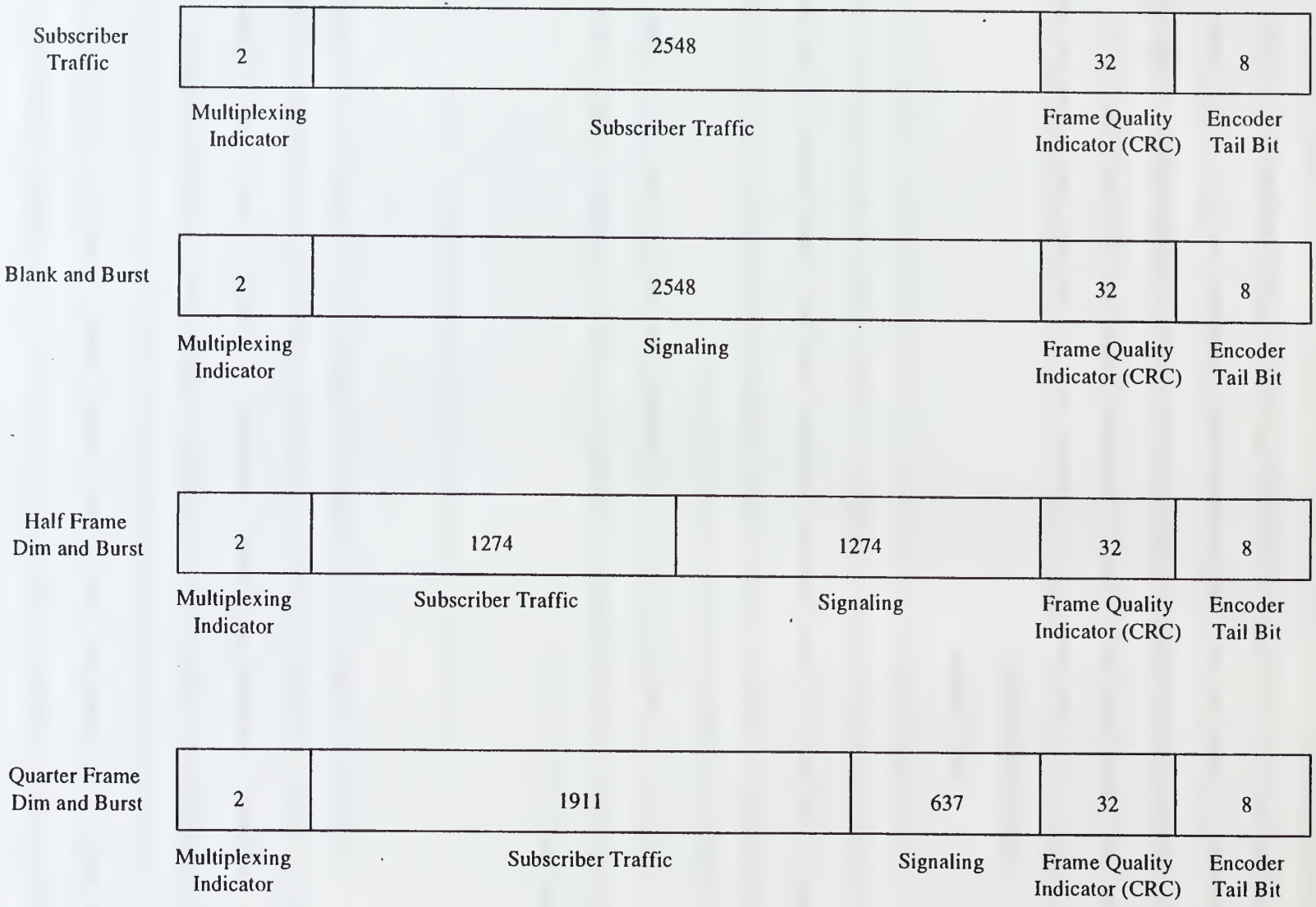


Figure 5.1 Bit Structure for Traffic Channel Frames

share the frame with user data. The power control/signaling traffic may share the frame equally with user data in a half frame dim and burst mode or may only use ¼ of the frame in quarter frame dim and burst mode. Thus, control messages may utilize an entire frame, a half frame, or ¼ frame. Unused portions of the frame are padded with zeros. The base station determines which format to use based on the volume of user versus power control/signaling traffic to be sent. This feature maximizes flexibility and minimizes wasted bandwidth by allowing formatted control messages to be tailored to one of three lengths and the remaining portion of the frame to be filled with user data. Frame configurations are shown in Figure 5.2. [8]

### 2. Paging Channel

The paging channel format is based on the IS-95 standard. It consists of 2048 time slots that repeat every 163.84 seconds. Each slot is 80 ms long and consists of four 20 ms frames, or eight 10 ms half frames. Each half frame consists of 1280 bits at 128 kbps. The first bit in each frame is a capsule indicator bit . If the indicator bit is a '0', the frame is empty and is ignored at the receiver. The rest of the frame consists of 11 bits that indicate the length of the message. Messages shorter than the 1236 bit maximum are padded by zeros. The last 32 bits represent the same CRC described by the polynomial in (5.1). The paging channel frame format is shown in Figure 5.2.

### 3. Sync Channel

The sync channel shall consist of a 90 ms superframe made up of three 30 ms frames. Each frame consists of a start of message bit for and a 3839 bit frame body. The frame body contains 12 bits that indicate the length of the message, 3795 bits reserved for sync messages, and a 32 bit CRC formed by the polynomial in (5.1). The sync channel frame format is shown in Figure 5.3. [8]

## C. REVERSE CHANNEL

### 1. Traffic Channel

The reverse traffic channel shall be framed identically to the forward traffic channel as described in section A.1. of this chapter.

### 2. Access Channel

The access channel shall use the same frame structure as the paging channel described in section B.2. The paging channel transmission is controlled by one base station, with several mobile subscribers monitoring.

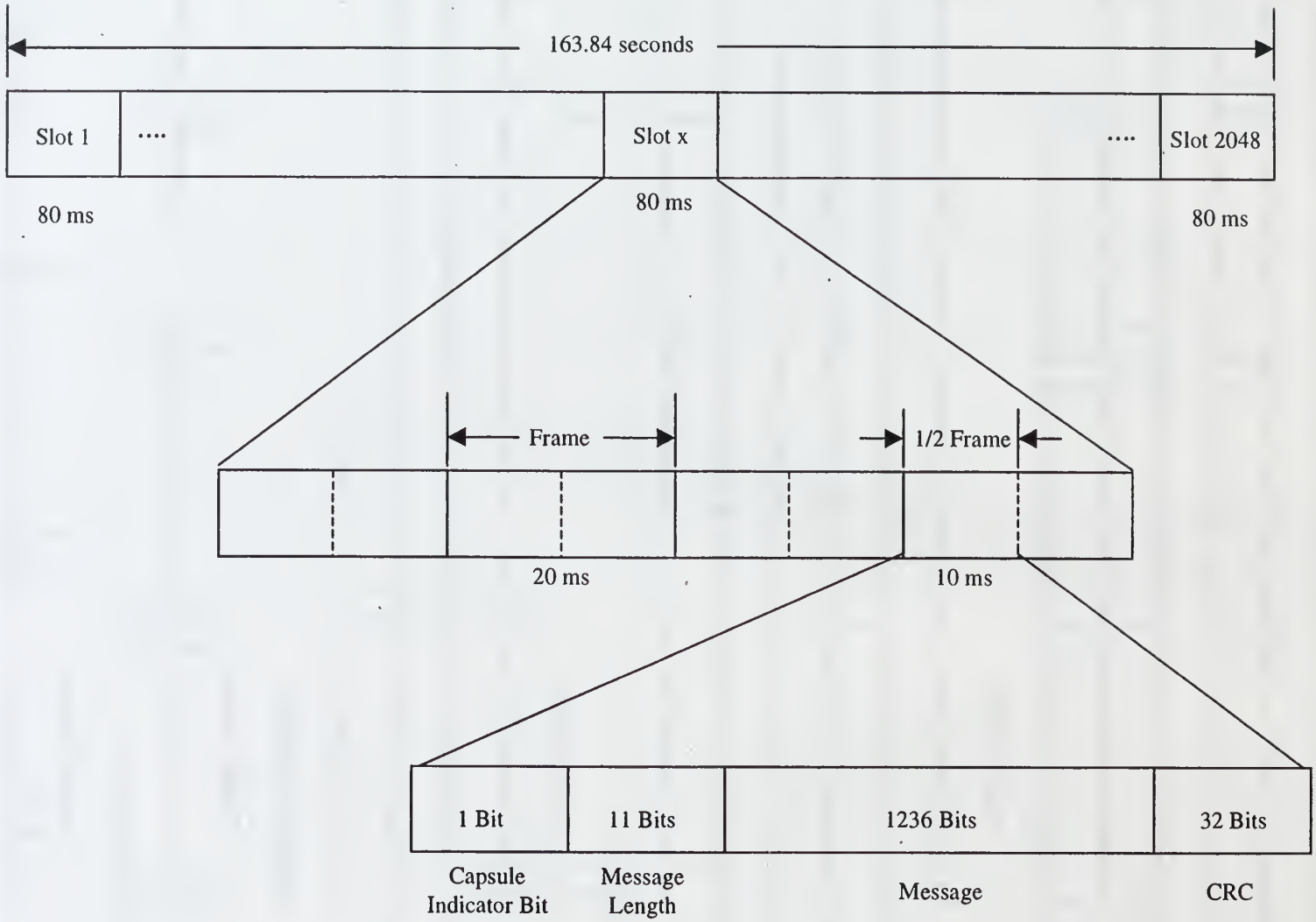


Figure 5.2 Paging / Access Channel Frame Structure

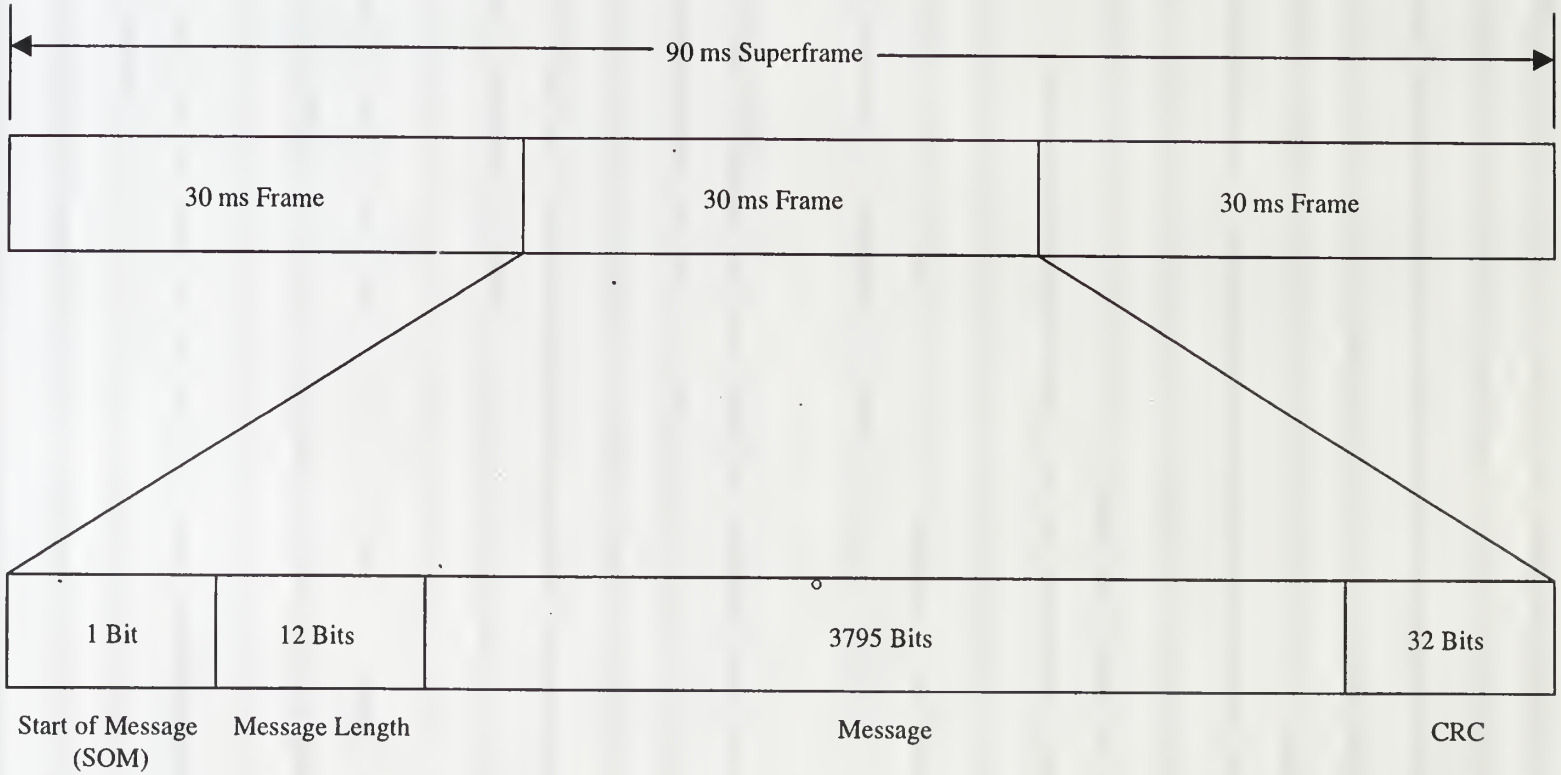


Figure 5.3 Synchronization Channel Frame Structure

Each mobile sends call initiation requests or control messages to the same base station with no knowledge of when other mobiles sharing the same subcarrier might transmit. An unslotted Aloha random access protocol is utilized to allow multiple subscribers to share the access channel. The choice of the unslotted Aloha random access protocol is based on the assumption of light loading for call initiation requests and control messages during call setup. A slotted Aloha protocol would provide greater capacity but requires synchronization.

A mobile subscriber may transmit access channel messages at will. If another mobile subscriber transmits during the same timeframe a collision occurs and both messages are corrupted. The base station does not recognize the garbled message as valid and does not respond with an acknowledgement. The interfering stations each wait a randomly specified time before repeating their request. The random retransmission delay interval reduces the probability of the same two stations interfering upon retransmission.

The primary advantage of the Aloha protocol is simplicity and low overhead. It is well suited to lightly loaded links such as the access channel, but collisions dominate under moderate to heavy traffic. The Aloha protocol is practical as long as channel access requests are less than or equal to 16% of channel capacity. [9]

If channel access requests exceeds 16% of channel capacity, an unacceptable number of collisions occur and mobiles are unable to access the system. An alternative protocol such as carrier sense multiple access (CSMA) may be used. CSMA requires mobiles to monitor the access channel and transmit only if the time slot is not already in use. However, the CSMA protocol is more complex and requires minimal propagation and detection delay to allow for effective sensing of the channel. It is more commonly used in computer local area networks as a result.

#### 3. Sync Channel

The sync channel shall be framed in the same manner as for the forward channel, described in section B.3 of this chapter.

### D. DEMAND ASSIGNMENT

Allocation of available bandwidth among several users based on demand is referred to as demand assignment. Demand assignment occurs initially via the paging and access channels during call setup. However, bandwidth allocation may be continually reassessed and reassigned as necessary after call setup via control messages over the traffic channel. During call setup the mobile subscriber issues a demand request

message over the access channel specifying the desired level of service. The first field of the demand request message consists of two bits that indicate whether the mobile is operating in Mode I or Mode II. A '01' indicates Mode I operation and a '10' indicates Mode II operation. The second field of the demand request message consists of one bit that specifies whether the mobile is operating in the VHDR or HDR mode for Mode I, or MDR versus LDR for Mode II. A '0' indicates the lower data rate and a '1' indicates the higher data rate. The third field consists of six bits which specify the basic bit rate in binary. It indicates whether the basic bit rate is the maximum of 64 kbps or whether reduced basic bit rate operation at 32, 16, or 8 kbps is desired for low data rate applications or added diversity in a severe fading environment. The binary value of the field indicates the desired basic bit rate. The fourth demand request message field consists of 32 bits that provide an estimate of the maximum desired bit rate. This field is used to determine the exact number of channels required for Mode II operation during call setup. It may also be used for requests for additional bandwidth via a control message on the traffic channel subsequent to initial channel assignment. The last field consists of a 32-bit CRC. There are a total of 73 bits in the demand request message. Figure 5.4 illustrates the demand request message structure.

The base station receives the demand request and assigns bandwidth to the mobile via the paging channel based on the mobile's request and the bandwidth available at the time. The base station automatically satisfies the mobile's request if the bandwidth is available. If the bandwidth is not available, the base station sends the mobile an acknowledgement message indicating that it received the request and indicates what bit rate, if any, it can support at the time. The mobile may accept the lower bit rate and continue with call setup or terminate the call and try another time. The mobile may utilize Mode I for LDR or MDR applications if an entire subcarrier is avialable as described in section A of Chapter IV.

The mobile may request additional bandwidth at any time via a demand request message in the power control/signaling portion of the traffic channel frame after call setup. The format is the same as during call setup. The base station reevaluates bandwidth availability at that time and assigns additional channels or denies the request.

The fields of the assignment message specify which combinations of the six subcarriers and eight PN codes are assigned to each mobile for Mode II operation. Each assignment message consists of 96 bits, or eight eight-bit assignment fields and a 32-bit CRC. Only one or two of the eight assignment fields are utilized for Mode I

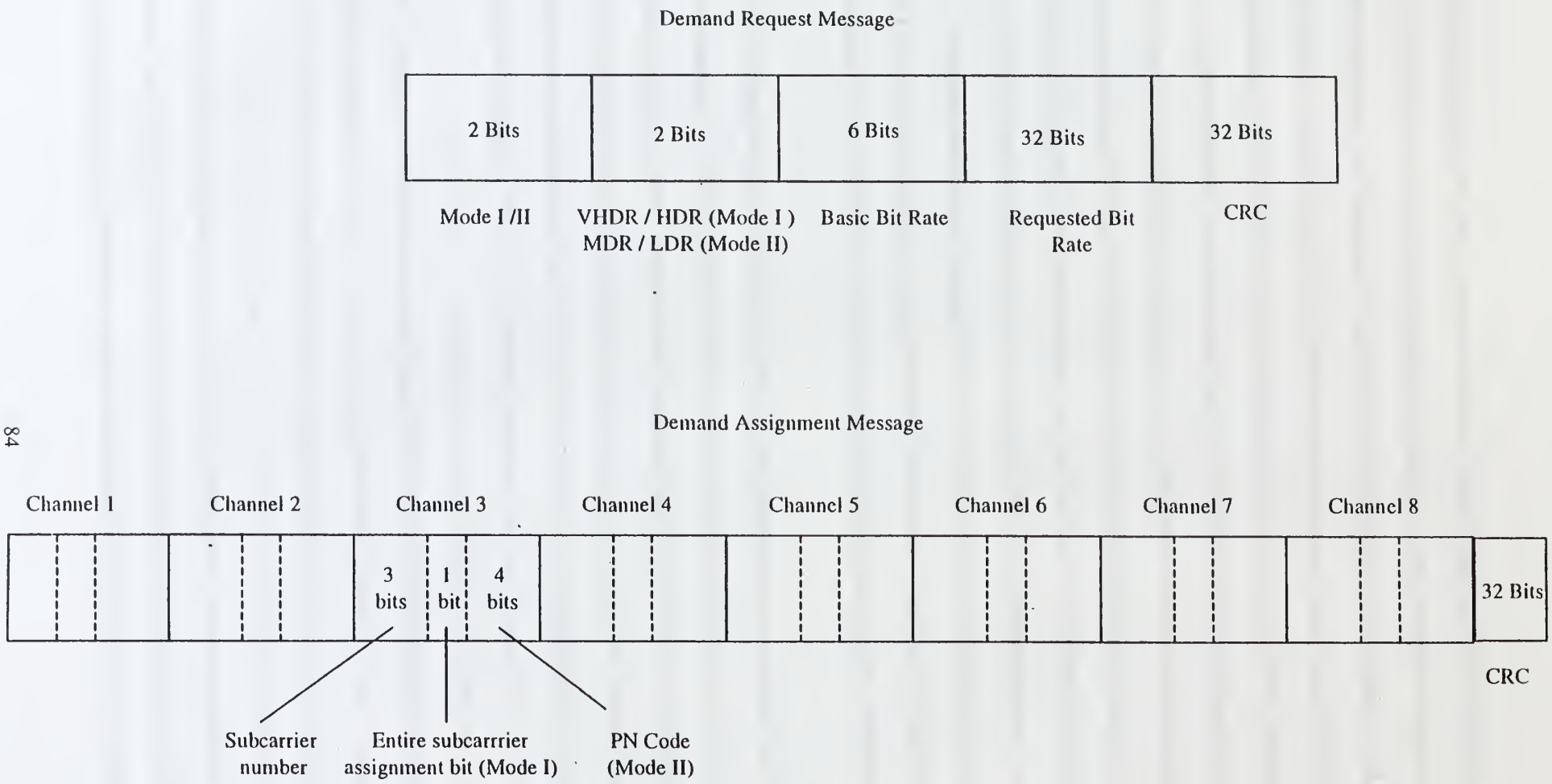


Figure 5.4 Demand Assignment Message Formats

operation. The remaining fields are padded with zeros. A maximum of up to eight subcarrier/channel combinations can be assigned for Mode II operation.

The first three bits of each seven bit assignment field indicate which of the six subcarriers is assigned. If the fourth bit is a '1', the entire subcarrier is assigned to one mobile for Mode I operation. If the fourth bit is a '0', the last four bits assign the PN code for Mode II operation. The format is the same over the power control/signaling portion of the traffic channel if additional channels are assigned based on a request from a mobile.

## E. POWER CONTROL

Power control is required for CDMA to ensure that all mobiles are received with the same power level at the base station regardless of their position within the cell. Failure to do so allows mobiles with the highest received power at the base station to dominate the system and prevent other mobiles from sharing the same frequency. The stronger mobiles represent unacceptably high power co-channel interference sources to other users attempting to share the frequency. This is commonly referred to as the near-far problem. To prevent the near-far problem from occurring, power control messages are sent via the paging channel during call setup and power control/signaling portion of the forward traffic channel. The base station monitors the received power level for each mobile and instructs them to increase or decrease power level in 1 dB increments to maintain parity among users and allow the maximum number of users to share the same frequency.

## F. GLOBAL POSITIONING

Global positioning information may be utilized to improve upon the initial design by increasing capacity on the reverse channel in Mode II. W-H functions on the same subcarrier must be synchronized to maintain orthogonality. On the forward channel synchronization is not a problem because the base station transmits all W-H functions using the same subcarrier at the same time. In Mode I, one user is assigned all the W-H codes of a particular subcarrier and can maintain synchronization among them. In Mode II, different users are assigned channels that reside on the same subcarrier. To utilize W-H functions, each user must synchronize his transmission with all other users on the same subcarrier sharing the same set of W-H functions. On the reverse channel in Mode II operation, synchronization cannot be maintained between W-H functions transmitted at random time from different locations within the cell The PN codes used for Mode II operation on

the reverse channel are designed for asynchronous use, but cannot support as many users as W-H codes because they are not truly orthogonal.

Global Positioning System (GPS) information may be used to determine the location of each mobile in the cell and coordinate transmissions to maintain synchronization among W-H codes. The use of W-H codes instead of PN codes could be used to increase capacity in Mode II to the a level approaching that of the forward channel.

# VI. CONCLUSIONS AND RECOMMENDATIONS

## A. CONCLUSIONS

The demand for mobile access to high data rate communications services such as video teleconferencing, internet access, or file transfer continues to grow rapidly for a wide variety of military as well as commercial applications. Existing mobile narrowband cellular communications systems do not have sufficient bandwidth to support high data rate applications. Simply increasing the bandwidth of existing cellular systems to support higher data rates results in a significant degradation in signal quality and reliability due to frequency-selective fading. This thesis presents a design for a wideband cellular system that is resistant to frequency-selective fading and maximizes use of available bandwidth. Many aspects of the design are based on the Telecommunications Industries Association/Electronics Industry Association Interim Standard 95A (IS-95) and scaled appropriately for wideband applications. The design described in this thesis differs from the IS-95 standard in the following respects:

- IS-95 is a narrowband system with a maximum bit rate of 9600 bps. In this thesis, a wideband system that supports bit rates up to 1.664 Mbps per user is described.
- Multiple carriers are utilized to minimize frequency-selective fading. IS-95 uses one carrier.
- A dual mode reverse channel and demand assignment to are incorporated to maximize use of available bandwidth. IS-95 does not have these features.

The forward traffic channel carries traffic from the base station to the mobile subscriber and consists of the following basic components:

- A subcarrier demultiplexer that separates the input into six separate signals so they can be assigned to six independent subcarriers. Signal bandwidth for each subcarrier is one-sixth of the bandwidth of the original signal. Hence, each subcarrier can operate in a channel with one-sixth the channel coherence bandwidth of the original signal without encountering frequency-selective fading.
- A channel demultiplexer that divides each subcarrier signal into 15 separate signals in addition to a pilot tone that share each subcarrier through the assignment of W-H functions.

- A ½ rate, constraint length nine convolutional encoder from the IS-95 standard for forward error correction.
- Symbol repetition for reduced bit rates to support low data rate applications or further reduce susceptibility to frequency-selective fading in a severe fading environment.
- A 58 X58 bit interleaver to reduce susceptibility to burst errors.
- Data scrambling for enhanced security via modulo-2 addition of a decimated long PN code to the signal.
- Multiplexing of control/signaling information to perform link management and control functions.
- Orthogonal spreading of the signal via the modulo-2 addition of a 16-bit W-H code that allows up to 13 users to share the same subcarrier in addition to a pilot channel, synchronization channel, and paging channel.
- Modulo-2 addition of a short PN code from the IS-95 standard to reduce interference from neighboring cells.
- Binary phase-shift keying or quadrature phase-shift keying modulation.
- A carrier combiner to allow use of one versus six amplifiers for the six subcarriers.

The reverse channel carries traffic from the mobile subscribers to the base station. There are two possible modes of operation: Mode I for high and very high bit rate applications and Mode II for low and medium bit rate applications. Mode I maximizes bit rate for a few users and has limited flexibility in bandwidth assignment, while Mode II provides lower bit rates for a larger numbers of users and allows for more flexible bandwidth assignment.

Two modes are required for the reverse channel because of the W-H synchronization problems associated with many different mobiles transmitting at different times. On the forward channel, synchronization is not a problem because only the base station transmits. The base station can easily transmit all W-H functions sharing the same subcarrier simultaneously so that synchronization and orthogonality is maintained.

In Mode I, the W-H function synchronization issue is addressed by assigning each mobile all channels of a subcarrier. Although use of W-H functions maximizes the capacity of each subcarrier, the W-H function synchronization requirement limits the total number of simultaneous users in the system to

six in Mode I. The reverse channel uses the same components as the forward channel in Mode I operation. The primary difference in the forward channel and reverse channel in Mode I operation is that for the forward channel the base station can assign any combination of 64 kbps channels from any of the six subcarriers for traffic to a mobile since the base station has complete control over synchronization for all the signals. In Mode I operation of the reverse channel, each user must be assigned all fifteen 64 kbps channels of either one or two entire subcarriers.

In Mode II, PN codes are used instead of W-H functions. The use of PN codes allows different mobile suscribers who may transmit at randomly different times to share the same subcarrier, thus avoiding the synchronization issue. The channels of a subcarrier may be assigned to different users in Mode II versus allocating an entire subcarrier to one user as in Mode I. This allows the bandwidth to be allocated more efficiently among low or medium data rate applications that do not require an entire subcarrier. Because PN codes are not truly orthogonal, fewer users can share the same bandwidth before co-channel interference raises the noise floor to unacceptably high levels. Hence, each subcarrier can support only four simultaneous channels in Mode II versus 16 in Mode I. However, because multiple users can be assigned to the same subcarier, the system can support a total of up to 17 simultaneous users in Mode II versus six for Mode I. Total capacity is traded for flexibility and bandwidth efficiency. System components for reverse channel Mode II operation differ from the forward channel and reverse channel Mode II operation in the following respects:

- The channel demultiplexer separates the signal into only four per subcarrier in Mode II versus fifteen in Mode I due to the use of PN codes versus W-H functions for multiple access.
- The long PN code is used for randomization and the short PN code is used for spreading in Mode II. In the forward channel and reverse channel Mode I, the long PN code is used for radomization, W-H functions are used for spreading, and the short PN code is specific to a particular cell.
- DPSK modulation is used in Mode II instead of BPSK or QPSK modulation to minimize complexity for low data rate applications.

Frame structures are based on IS-95 frame sizes to simplify frame synchronization. The number of bits per frame is scaled to reflect the higher bit rates of this design. Demand assignment is incorporated to efficiently utilize available bandwidth, and power control is included to alleviate the near-far problem.

## B. RECOMMENDATIONS

Future work in the development of this design might include the following:

- Development of an equalization method to be incorporated at the receiver to provide additional compensation in severe frequency-selective fading environments.
- Utilization of GPS for W-H chip synchronization in Mode II operation on the reverse channel to increase the available bit rate.
- Refinement of frame structures to include specific message formats for link management functions.
- Analysis of the system design in a multi-cell environment using multi-cell signal-to-interference ratio parameters and the most up-to-date propagation models.
- Refining system components to reflect recent advances in technology such as improved encoders, interleavers, and modulators.

## LIST OF REFERENCES


1. Rietman, J., *Third Generation Wirelass and Wideband CDMA*, International Data Communications Group Publication # P1464, July 1997

2. Bhatia, K., *Next Generation Wireless Networks*, InFocus, Intertec Publishing Corp. February 16, 1998

3. Rappaport, T., *Wireless Communications*, Prentice Hall, Upper Saddle River, NJ, 1996

4. Longin, I., *Broadband PCS Fact Sheet*, Federal Communications Commission Wireless Telecommunications Bureau, February 2, 1998

5. Dawson, F., *Vendors to Introduce Wide-Bandwidth CDMA*, Wireless Week, Chilton Publishing, Denver, CO, April 21, 1997

6. Meyers, J., *Piece by Piece, ETSI Patches Together GSM Evolutionary Framework*, Wireless Network News, February 9, 1998

7. Seidel, S., Rappaport, T., Jain, S., Lord, M., and Singh, R., *Path Loss, Scattering, and Multipath Delay Statistics in Four European Cities for Digital Cellular and Microcellular Radiotelephone*, IEEE Transactions on Vehicular Technology, Vol. 40, No. 4, November 1991

8. Telecommunications Industry Association/Electronic Industries Association Interim Standard 95A (TIA/EIA IS-95A), *Mobile Station – Base Station Compatibility Standard for Dual-Mode Wideband Spread Spectrum Cellular System*, May 1995

9. Sklar, B., *Digital CommunicationsFundamentals and Applications*, Prentice Hall, Englewood Cliffs, NJ, 1988

10. Proakis, J., *Digital Communications*, McGraw-Hill, New York, NY, 1995

11. Stallings, W., *Data and Computer Communications*, Prentice Hall, Upper Saddle River, NJ, 1997

## INITIAL DISTRIBUTION LIST

| | | No. Copies |
|---|---|---|
| 1. | Defense Technical Information Center<br>8725 John J. Kingman Rd., STE 0944<br>Ft. Belvoir, VA 22060-6218 | 2 |
| 2. | Dudley Knox Library<br>Naval Postgraduate School<br>411 Dyer Rd.<br>Monterey, CA 93943-5101 | 2 |
| 3. | Chairman, Code EC<br>Department of Electrical and Computer Engineering<br>Naval Postgraduate School<br>Monterey, CA 93943-5121 | 1 |
| 4. | Professor Tri Ha, Code EC/Ha<br>Department of Electrical and Computer Engineering<br>Naval Postgraduate School<br>Monterey, CA 93943-5121 | 2 |
| 5. | Professor R. Clark Robertson, Code EC/Rc<br>Department of Electrical and Computer Engineering<br>Naval Postgraduate School<br>Monterey, CA 93943-5121 | 2 |
| 6. | LCDR Wilburn T. Strickland, Jr.<br>514 Quarterman Dr.<br>Savannah, GA 31410 | 3 |

66 553NPS
TH 3729
11/99 22527-106 NULP

DUDLEY KNOX LIBRARY
3 2768 00366374 1